King's Research Portal

DOI:
10.1016/j.ydbio.2012.06.028

Link to publication record in King's Research Portal

Citation for published version (APA):
Grocott, T., Tambalo, M., & Streit, A. (2012). The peripheral sensory nervous system in the vertebrate head: A gene regulatory perspective. *Developmental Biology*, *370*(1), 3-23. https://doi.org/10.1016/j.ydbio.2012.06.028

Citing this paper
Please note that where the full-text provided on King's Research Portal is the Author Accepted Manuscript or Post-Print version this may differ from the final Published version. If citing, it is advised that you check and use the publisher's definitive version for pagination, volume/issue, and date of publication details. And where the final published version is provided on the Research Portal, if citing you are again advised to check the publisher's website for any subsequent corrections.

General rights
Copyright and moral rights for the publications made accessible in the Research Portal are retained by the authors and/or other copyright owners and it is a condition of accessing publications that users recognize and abide by the legal requirements associated with these rights.

•Users may download and print one copy of any publication from the Research Portal for the purpose of private study or research.
•You may not further distribute the material or use it for any profit-making activity or commercial gain
•You may freely distribute the URL identifying the publication in the Research Portal

Take down policy
If you believe that this document breaches copyright please contact librarypure@kcl.ac.uk providing details, and we will remove access to the work immediately and investigate your claim.

Download date: 15. Jan. 2025

XML-IS

Our reference: YDBIO 5781 P-authorquery-vx

AUTHOR QUERY FORM

ELSEVIER	**Journal: YDBIO** **Article Number: 5781**	**Please e-mail or fax your responses and any corrections to:** **E-mail: corrections.essd@elsevier.macipd.com** **Fax: +44 1392 285878**

Dear Author,

Please check your proof carefully and mark all corrections at the appropriate place in the proof (e.g., by using on-screen annotation in the PDF file) or compile them in a separate list. Note: if you opt to annotate the file with software other than Adobe Reader then please also highlight the appropriate place in the PDF file. To ensure fast publication of your paper please return your corrections within 48 hours.

For correction or revision of any artwork, please consult http://www.elsevier.com/artworkinstructions.

Any queries or remarks that have arisen during the processing of your manuscript are listed below and highlighted by flags in the proof. Click on the Q link to go to the location in the proof.

Location in article	**Query / Remark: click on the Q link to go** **Please insert your reply or correction at the corresponding line in the proof**
Q1	Please confirm that given names and surnames have been identified correctly and are presented in the desired order.
Q2	Please check the address for the corresponding author that has been added here, and correct if necessary.
Q3	Please check the fax number of the corresponding author, and correct if necessary.
Q4	Please check the citation and placement of Table 1.
Q5	"Hoffman, 2007" changed to "Hoffman et al.,2007" as per the Ref. list. Please check.
Q6	Please provide further details of "Streit, 2008".
Q7	There are 2 legends (one in MS and the other in a separate table.doc) given for Table 1. Hence the one given in the MSS has been followed. Please check and confirm whether it is OK or any changes need to be done.
Q8	"Luo et al. (2001, 2002)" are cited in the table but is missing from the reference list – please make the list complete or remove the reference from the text.
Q9	"Esterberg and Fritz (2010)" is cited in the text but is missing from the reference list – please make the list complete or remove the reference from the text.
Q10	"Solomon et al. (2003)", "Philips et al. 2004", "Philips et al. (2001)", "Lahder et al., 2000" are cited in the text but is missing from the reference list – please make the list complete or remove the reference from the text.

Thank you for your assistance.

Please check this box if you have no corrections to make to the PDF file ☐

Developmental Biology ∎ (∎∎∎∎) ∎∎∎–∎∎∎

Contents lists available at SciVerse ScienceDirect

Developmental Biology

journal homepage: www.elsevier.com/locate/developmentalbiology

Highlights

Developmental Biology ∎ (∎∎∎∎) ∎∎∎–∎∎∎

The peripheral sensory nervous system in the vertebrate head: A gene regulatory perspective

Q1 Timothy Grocott, Monica Tambalo, Andrea Streit

Department of Craniofacial Development and Stem Cell Biology, King's College London, Guy's Tower Floor 27, London SE1 9RT, UK

► Sequential activation of transcription factor networks subdivides the ectoderm. ► Temporal sequence of signals and transcription factors determines cell fate. ► Positive feedback loops and mutual repression stabilise cell fate.

UNCORRECTED PROOF

0012-1606/$ - see front matter © 2012 Published by Elsevier Inc.
http://dx.doi.org/10.1016/j.ydbio.2012.06.028

Please cite this article as: Grocott, T., et al., The peripheral sensory nervous system in the vertebrate head: A gene regulatory perspective. Dev. Biol. (2012), http://dx.doi.org/10.1016/j.ydbio.2012.06.028

Developmental Biology ∎ (∎∎∎∎) ∎∎∎–∎∎∎

Contents lists available at SciVerse ScienceDirect

Developmental Biology

journal homepage: www.elsevier.com/locate/developmentalbiology

Review

The peripheral sensory nervous system in the vertebrate head: A gene regulatory perspective

Q1 Timothy Grocott[1], Monica Tambalo, Andrea Streit*

Department of Craniofacial Development and Stem Cell Biology, King's College London, Guy's Tower Floor 27, London SE1 9RT, UK

ARTICLE INFO

Article history:
Received 17 April 2012
Received in revised form
28 June 2012
Accepted 29 June 2012

Keywords:
Placodes
Sensory nervous system
Transcription factors
Network
Gene regulation

ABSTRACT

In the vertebrate head, crucial parts of the sense organs and sensory ganglia develop from special regions, the cranial placodes. Despite their cellular and functional diversity, they arise from a common field of multipotent progenitors and acquire distinct identity later under the influence of local signalling. Here we present the gene regulatory network that summarises our current understanding of how sensory cells are specified, how they become different from other ectodermal derivatives and how they begin to diversify to generate placodes with different identities. This analysis reveals how sequential activation of sets of transcription factors subdivides the ectoderm over time into smaller domains of progenitors for the central nervous system, neural crest, epidermis and sensory placodes. Within this hierarchy the timing of signalling and developmental history of each cell population is of critical importance to determine the ultimate outcome. A reoccurring theme is that local signals set up broad gene expression domains, which are further refined by mutual repression between different transcription factors. The Six and Eya network lies at the heart of sensory progenitor specification. In a positive feedback loop these factors perpetuate their own expression thus stabilising pre-placodal fate, while simultaneously repressing neural and neural crest specific factors. Downstream of the Six and Eya cassette, Pax genes in combination with other factors begin to impart regional identity to placode progenitors. While our review highlights the wealth of information available, it also points to the lack information on the cis-regulatory mechanisms that control placode specification and of how the repeated use of signalling input is integrated.

© 2012 Published by Elsevier Inc.

UNCORRECTED PROOF

Contents

Introduction . . . 2
Placodes and their derivatives . . . 2
Placode progenitor distribution and their relationship with neighbouring cells . . . 3
Special properties of sensory placode progenitors . . . 4
Six and Eya family members at the core of the PPR gene network . . . 4
Transcription factors upstream of the *Six* and *Eya* network . . . 7
Subdivision of the ectoderm by sequential activation of transcription factors . . . 7
Restricting neural fate: repression by non-neural transcription factors . . . 9
Transcriptional input into the Six and Eya network . . . 10
Stabilising sensory progenitor fate: positive feedback loops and repression of alternative fates . . . 11
Signalling events upstream of the core PPR gene network . . . 11
Signalling input into the Six and Eya network . . . 11
Signals differentiating sensory placode and neural crest progenitors . . . 12
Integrating FGF, BMP and Wnt signalling . . . 12
Regionalisation of the PPR . . . 13
The anterior PPR: adenohypophysis, olfactory and lens progenitors . . . 13

Q2 *Correspondence to: School of Biological Sciences, University of East Anglia, Norwich NR4 7TJ, UK. Fax: +44 20 7188 1674.
E-mail address: andrea.streit@kcl.ac.uk (A. Streit).
Q3 [1] Current address: School of Biological Sciences, University of East Anglia, Norwich NR4 7TJ, UK.

0012-1606/$ - see front matter © 2012 Published by Elsevier Inc.
http://dx.doi.org/10.1016/j.ydbio.2012.06.028

ARTICLE IN PRESS

The posterior PPR: otic and epibranchial precursors . . . 15
The intermediate PPR: trigeminal precursors . . . 16
Conclusion . . . 16
Acknowledgements . . . 17
Appendix ASupporting information. . . . 17
. . . 17
References . . . 17

Introduction

The sensory placodes give rise to most of the peripheral sensory nervous system in the vertebrate head. They form the lens of the eye, the inner ear and the olfactory epithelium and, together with neural crest cells, contribute to the cranial sensory ganglia. Initially, placodes develop as simple patches of ectoderm outside of the central nervous system, but subsequently produce a large variety of cell types ranging from simple lens fibres to sensory cells and neurons, neuroendocrine cells as well as self-renewing stem cells in the olfactory epithelium. As a defining feature of vertebrates, placodes have recently attracted much attention and the molecular pathways controlling their development are beginning to be unravelled.

Placode formation and differentiation is a long process. One of the most surprising findings is that despite their diversity, placodes arise from a common territory of multipotent precursors, the pre-placodal region (PPR), and their progenitors initially share common properties (Bailey et al., 2006; Martin and Groves, 2006; for review: Schlosser, 2006, 2010; Streit, 2007, 2008)—a hypothesis originally proposed almost 50 years ago (Jacobson, 1963a, b, c; see also Torres and Giraldez, 1998). Placode progenitors are specified from "the border", a region where neural and non-neural gene expression overlaps and where cells are initially competent to give rise to neural, neural crest and placodal derivatives, as well as epidermis (Baker et al., 1999; Basch et al., 2000; Bhattacharyya and Bronner-Fraser, 2008; Gallagher et al., 1996; Gallera and Ivanov, 1964; Groves and Bronner-Fraser, 2000; Hans et al., 2007; Köster et al., 2000; Kwon et al., 2010; Liedke, 1942, 1951; Martin and Groves, 2006; Nieuwkoop, 1958; Pieper et al., 2012; Selleck and Bronner-Fraser, 1995; Servetnick and Grainger, 1991; Storey et al., 1992; Streit et al., 1997; Waddington, 1934, 1935; Waddington and Needham, 1936). Specification of placode progenitors is controlled through a balance of inductive and repressive signals emanating from surrounding tissues: the adjacent neural plate and future epidermis and the underlying mesoderm (Ahrens and Schlosser, 2005; Brugmann et al., 2004; Litsiou et al., 2005). Subsequently, placode precursors become different from each other (Ladher et al., 2010; McCabe and Bronner-Fraser, 2009; Ohyama et al., 2007; Schlosser, 2010) and converge from an initially wide distribution within the pre-placodal region (PPR) towards focal thickenings (the placodes) (Bhattacharyya et al., 2004; Pieper et al., 2011; Streit, 2002; Xu et al., 2008). Once formed, placodes either remain as transient neurogenic patches from which neuroblasts delaminate to form the cranial ganglia or expand to deposit neuromasts along the entire body axis, as is the case for the lateral line in amphibians and fish. Alternatively, they invaginate, undergo complex morphogenetic changes and differentiate into various organ-specific cell types characteristic for the lens, otic and olfactory tissues.

Thus, from initial placode progenitor induction to terminal differentiation, ectodermal cells navigate a hierarchy of regulatory states with successively limited developmental potential. Emerging molecular data point to a complex gene regulatory network (GRN) that controls these events and distinguishes placode precursors from other ectodermal derivatives such as the neural plate, neural crest and epidermis. Within this network, each step in the temporal hierarchy can be identified by a specific set of transcription factors (defining the regulatory state of cells at this stage), which cross-regulate each other and which in turn are controlled by defined signalling inputs. While direct interactions and cis-regulatory modules of genes expressed in the placodes are only beginning to be elucidated, there are now sufficient gain- and loss-of-function data to begin to assemble a GRN to model the transition from multipotent placode progenitors towards differentiated placode derivatives. Such networks represent a powerful way to represent developmental processes and cell fate decisions as they allow the integration of large amounts of data into logical circuits (Betancur et al., 2010a; Davidson, 2009; Levine and Davidson, 2005; Peter and Davidson, 2011). For placode development, the main challenge is the integration of information from different animal models that differ in the timing of these events and in the experimental approaches that can be used. Even more complexity arises from the dynamic nature of the process, as illustrated by continuous changes in gene expression and the repeated use of the same signals. Here, we will first provide a brief overview of placode derivatives and their development. Then we will summarise the known molecular events that control the specification of placode progenitor cells and their patterning along the anterior–posterior axis. We will integrate this information into a gene regulatory network using BioTapestry as a tool (Longabaugh et al., 2005, 2009).

Placodes and their derivatives

During embryonic development sensory placodes are first visible as epithelial thickenings next to the developing neural tube (Fig. 1b). Two placodes are non-neurogenic: the adenohypophyseal and lens placodes. While the latter forms next to the future retina to generate the crystalline lens of the eye with lens fibre and epithelial cells, the former develops in the midline and gives rise to the anterior pituitary gland, which generates different neuroendocrine cells. The ophthalmic and maxillomandibular trigeminal placodes (profundal and trigeminal in anamniotes) and epibranchial placodes are simple neurogenic patches, from which neuroblasts delaminate to form the distal portions of the Vth, VIIth, IXth and Xth ganglia. While the trigeminal (Vth) ganglion provides somatosensory innervation from the face, the epibranchial placode-derived neurons provide viscerosensory input from the heart and other visceral organs and gustatory information from the oral cavity. In aquatic vertebrates, the pre- and post-otic lateral line placodes form a specialised sensory system for the detection of water movement and electric fields along the entire body axis generating both neurons and sensory cells. Finally, the otic and olfactory placodes form next to the hindbrain and future olfactory bulb, respectively, and undergo complex tissue reorganisation and folding after their initial invagination. The otic placode forms the auditory and vestibular part of the inner ear including sensory hair cells, the neurons that innervate them, supporting and endolymph-secreting cells, while the olfactory placode produces different cell types including olfactory sensory neurons, stem cells that regenerate them throughout life as well

UNCORRECTED PROOF

Please cite this article as: Grocott, T., et al., The peripheral sensory nervous system in the vertebrate head: A gene regulatory perspective. Dev. Biol. (2012), http://dx.doi.org/10.1016/j.ydbio.2012.06.028

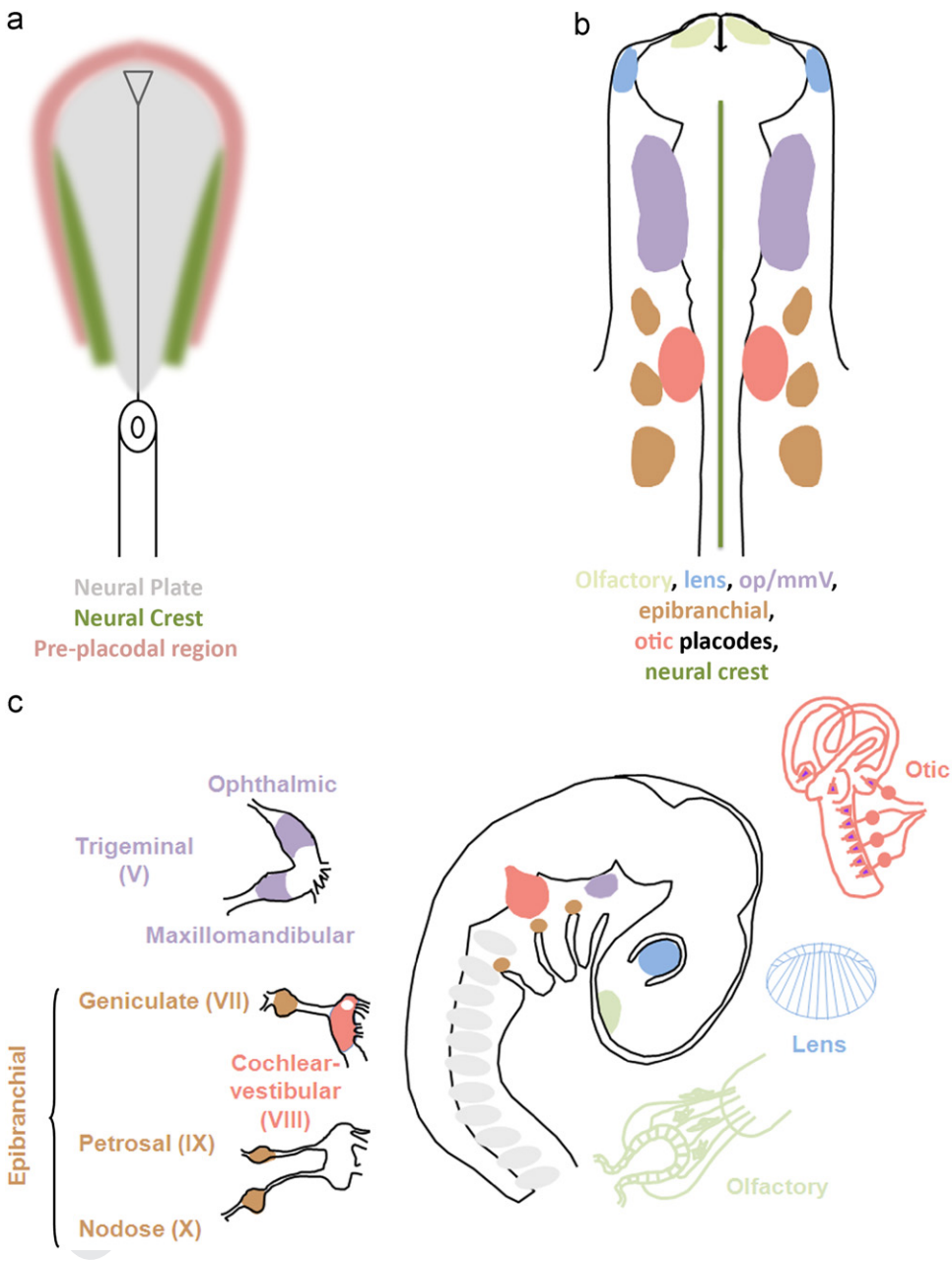

Fig. 1. Placodes and their derivatives. (A) At neural plate stages, the pre-placodal territory (pink) surrounds the anterior neural plate (grey); the neural crest territory lies more medial (green). Note: each domain is not yet clearly defined and progenitors for each cell population are intermingled. The PPR contains precursors for all sensory placodes. (B) Diagram of a 10-somite stage chick embryo; individual placodes are morphologically distinct as thickened patches of ectoderm and occupy distinct positions along the neural tube. Note: the adenohypophyseal placode is not shown and lies in the ventral midline. (C) Diagram showing placodes in a 3-day-old chick embryo and the derivatives at later stages. Left: cranial sensory ganglia; right: sense organ derivatives; modified after Webb and Noden (1993).

as a variety of migratory neurons that leave the placode to localise in the brain. Placode derivatives have been described in great detail in other recent reviews (Baker and Bronner-Fraser, 2001; Schlosser, 2010); however, this brief summary highlights their diversity in both structure and function (Fig. 1c).

Placode progenitor distribution and their relationship with neighbouring cells

Before and during gastrulation, placode precursors are widely dispersed in the ectoderm and intermingle with future neural, neural crest and epidermal cells (Ezin et al., 2009; Fernandez-Garre et al., 2002; Garcia-Martinez et al., 1993; Hatada and Stern, 1994; Streit, unpublished) and a unique placodal territory cannot be defined. However, shortly after the neural plate is established, placode progenitors co-localise to a contiguous band of ectoderm at its border, the pre-placodal region (PPR; Fig. 1a; Bhattacharyya et al., 2004; Dutta et al., 2005; Kozlowski et al., 1997; Pieper et al., 2011; Streit, 2002; Xu et al., 2008). They continue to be interspersed with other ectodermal derivatives and segregation occurs only after neural fold formation in chick, but slightly earlier in *Xenopus*. Two recent studies in zebrafish and *Xenopus* indicate that a first lineage restriction occurs between neural/neural crest and placode/epidermal lineages due to changes in competence (Kwon et al., 2010; Pieper et al., 2012). Initially, future epidermis is competent to generate neural, neural crest and placode cells; however as development proceeds, competence for neural and neural crest is lost, while placodal competence

ARTICLE IN PRESS

persists. Conversely, a young neural plate grafted into the border region can be induced to express both neural crest and pre-placodal markers, while an older neural plate has lost competence to produce placode precursors. While these experiments argue for an early restriction of competence in the neural plate and future epidermis, they leave open the possibility that in vivo cells at the border retain plasticity to change their fate depending on local signals.

Within the PPR, precursors for different placodes are initially mixed, but segregate over time to form morphological placodes with unique identities. The degree of overlap is still under debate as is the question of whether cell movements contribute to the separation of different cells with different fates (Bhat and Riley, 2011; Bhattacharyya et al., 2004; Pieper et al., 2011; Streit, 2002; Xu et al., 2008; for review: Schlosser, 2006; Streit, 2008). On one hand, it is possible that fate map data have overestimated the extent of cell mixing for technical reasons (for discussion see Pieper et al., 2011; Schlosser, 2006); on the other hand, species-specific differences may exist that reflect distinct modes of placode formation. While little or no movement is observed in *Xenopus* (Pieper et al., 2011), in fish and chick, placode precursors appear to move extensively although it is not clear whether movement is random or directional (Bhat and Riley, 2011; Bhattacharyya et al., 2004; Streit, 2002). Ultimately, live imaging over long periods will be required to resolve these issues. At this point the question remains of whether cells within the PPR are truly multipotent and acquire different fates according to their final location, or whether cells pre-committed to specific fates segregate to their appropriate destinations. Since all placode progenitors initially share common properties (see below) and are only committed to their ultimate fate much later (Baker et al., 1999; Bhattacharyya and Bronner-Fraser, 2008; Gallagher et al., 1996; Groves and Bronner-Fraser, 2000; Henry and Grainger, 1990; Jacobson, 1963a, b, c; Waddington, 1937), it is likely that the PPR represents a territory of multipotent cells. Finally, even after placode formation cells from the surrounding ectoderm continue to be recruited into the placodal epithelium (Steventon et al., 2012; Streit, 2002; Xu et al., 2008). This observation suggests that a placode–epidermis boundary is established fairly late and its sharpening may involve cross-repressive interactions of transcription factors similar to the formation of compartment boundaries in the central nervous system (Joyner et al., 2000; Katahira et al., 2000; Kobayashi et al., 2002; Li and Joyner, 2001; Millet et al., 1999; Schwarz et al., 1999). Thus, at neurula stages placode progenitors locate to a defined territory surrounding the anterior neural plate, from which distinct placodes emerge over time.

Special properties of sensory placode progenitors

The PPR is not only defined by the location of placode progenitors, but also by special properties that distinguish it from other ectodermal cells. At neural plate and early somite stages, competence to respond to signals that induce specific placodes is restricted to the head ectoderm and for some placodes to the PPR itself (Baker et al., 1999; Bhattacharyya and Bronner-Fraser, 2008; Gallagher et al., 1996; Groves and Bronner-Fraser, 2000; Henry and Grainger, 1990; Jacobson, 1963c; Ladher et al., 2000; Martin and Groves, 2006). Recent experiments demonstrate that cells must acquire PPR properties before they can form mature placodes (Martin and Groves, 2006). When non-PPR ectoderm is exposed to the otic inducer FGF2, otic markers are not induced; however if the same ectoderm is first grafted into the PPR at head fold stages, it initiates the expression of PPR-specific genes and can now be induced to form an ear. These experiments suggest that otic induction (and possibly the induction of other placodes) occurs in at least two steps: first, cells have to acquire a PPR regulatory state before they can become inner ear.

In addition, PPR cells also share a common developmental programme: irrespective of their later fate all placode precursors are initially specified as lens (Bailey et al., 2006). When PPR explants from different rostrocaudal levels are cultured in isolation they initiate *Pax6* expression (normally confined to trigeminal, lens, olfactory and adenohypophysis precursors), followed by a set of lens-expressed transcription factors like *Sox2*, *L-Maf* and *FoxC1* (Kamachi et al., 1995; Kamachi et al., 2001; Muta et al., 2002; Yoshimoto et al., 2005). Together, these are responsible for activation of the terminal differentiation genes α- and δ-*crystallin* and execution of the lens programme. These findings imply that placode inducing signals not only impart specific placodal fates, but must also suppress the lens programme. Indeed, this appears to be the case for most placodes: activation of the FGF pathway suppresses lens specification in vitro (Bailey et al., 2006) and is required for olfactory, trigeminal, otic and epibranchial placode formation (Alvarez et al., 2003; Bailey et al., 2006; Canning et al., 2008; Freter et al., 2008; Hans et al., 2007; Ladher et al., 2000; Maroon et al., 2002; Martin and Groves, 2006; Nechiporuk et al., 2007; Nikaido et al., 2007; Phillips et al., 2001; Wright and Mansour, 2003). Thus, acquisition of PPR identity is the first step during sensory placode development: PPR cells contribute to all placodes and share common properties before they diversify.

Six and Eya family members at the core of the PPR gene network

PPR cells are identified by a unique set of transcription factors that define their regulatory state. At neural plate stages, they become molecularly distinct by expressing Six and Eya family members (Ahrens and Schlosser, 2005; Bessarab et al., 2004; Esteve and Bovolenta, 1999; Ishihara et al., 2008; Kobayashi et al., 2000; Litsiou et al., 2005; McLarren et al., 2003; Mishima and Tomarev, 1998; Pandur and Moody, 2000). These nuclear factors not only play an important role in conferring PPR identity (Brugmann et al., 2004; Christophorou et al., 2009), but are also crucial for many aspects of sense organ and cranial ganglion formation at later stages (Donner and Maas, 2004; Hanson, 2001; Kawakami et al., 2000; Wawersik and Maas, 2000). They are therefore considered to be key regulators of placode development. In addition, the PPR is defined by many other transcription factors that form regulatory circuits with Six and Eya genes, although none of these are PPR specific, but act as their upstream regulators or in parallel pathways (Fig. 2, Table 1.

In vertebrates, six *Six* genes (*Six1-6*) and four *Eya* genes (*Eya1-4*) have been identified (for review: Donner and Maas, 2004; Hanson, 2001; Kawakami et al., 2000; Wawersik and Maas, 2000). Six1-6 proteins contain a Six-type DNA binding homeodomain and an N-terminal Six domain, which mediates interaction with cofactors (Kobayashi et al., 2001; Ohto et al., 1999; Pignoni et al., 1997a). Depending on the presence of such cofactors, Six1-6 proteins are transcriptional repressors or activators: together with Dach or Groucho proteins they inhibit transcription of downstream target genes, whereas when partnered with Eya proteins they act as transcriptional activators (Kenyon et al., 2005a, 2005b; Li et al., 2003; Rayapureddi et al., 2003; Tessmar et al., 2002; Tootle et al., 2003; Zhu et al., 2002). Eya1-4 proteins are unusual: they not only act as transcriptional activators, but also contain tyrosine phosphatase activity (for review: Jemc and Rebay, 2007). They are characterised by a conserved Eya domain, which harbours the phosphatase activity and is responsible for protein–protein interaction (e.g. with Six family members), and a moderately conserved Eya domain 2 surrounded by two proline/serine/threonine (P/S/T domain) stretches. The P/S/T domain is required for transactivation, while the precise function of the Eya domain 2 remains unclear.

Please cite this article as: Grocott, T., et al., The peripheral sensory nervous system in the vertebrate head: A gene regulatory perspective. Dev. Biol. (2012), http://dx.doi.org/10.1016/j.ydbio.2012.06.028

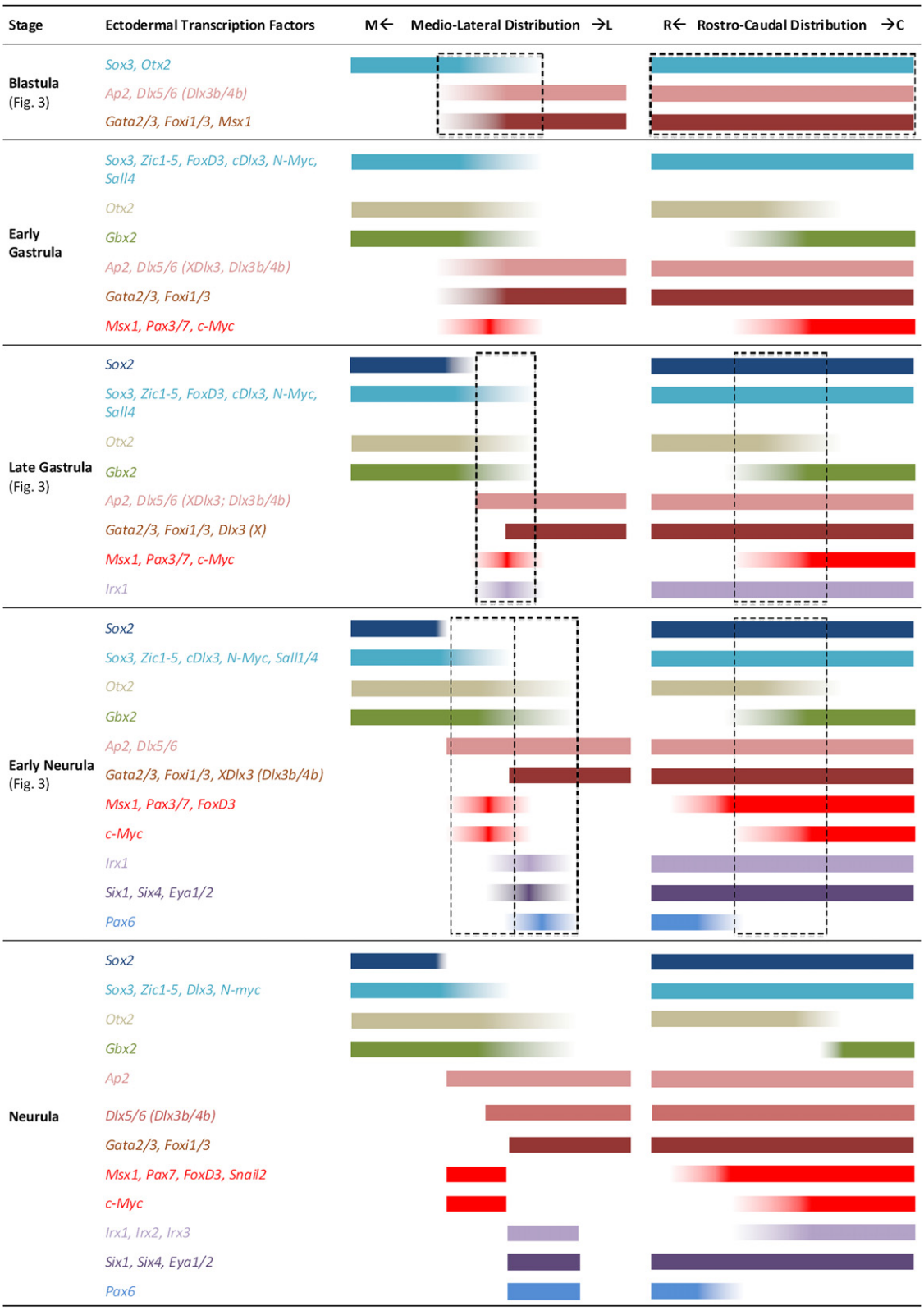

Fig. 2. Distinct regulatory states as ectodermal cells progress towards pre-placodal progenitors. The medio-lateral and rostro-caudal distributions of different ectodermal transcription factors are represented schematically, from pre-gastrula to neurula stages. TFs are organised and colour-coded according to their expression domains across multiple species. Hatched boxes (black) indicate the regulatory states described in the network depicted in Figs. 3 and 5 (see brackets on the left). See main text for full narrative description including references for gene expression data. Note: we use *Ap2* as a generic symbol for the Ap2 transcription factor family. Dlx gene nomenclature and expression across species is complex (see text); in addition to dynamic changes over time, differences are also observed along the anterior–posterior axis at neurula stages at least in chick (see, e.g. Streit, 2002). The diagrams represent approximations.

Please cite this article as: Grocott, T., et al., The peripheral sensory nervous system in the vertebrate head: A gene regulatory perspective. Dev. Biol. (2012), http://dx.doi.org/10.1016/j.ydbio.2012.06.028

ARTICLE IN PRESS

Table 1
Interac during PPR and placode specification. The table summarises all interactions described in the text and the appropriate references. Experimentally verified direct interactions are indicated by

	Source	Interaction	Target	System	Evidence
From blastula to nerula stages	FGF	Promotes	Sox3	Chick	Streit et 0), Wilson et al. (2001), Albazerchi and Stern (2007)
	Dlx5 (Dlx3b/4b), Dlx3, Six1/Eya2	Represses	Sox3	Chick, *Xenopus*	McLarren et al. (2003), Woda et al. (2003); Pieper et al. (2012)
	BMP, FGF, Wnt	Promotes	Zic1-5	*Xenopus*	Monsoro-Burq et al. (2003), Sato et al. (2005), Hong and Saint-Jeannet (2007)
	Pax3	Represses	Zic1-5	*Xenopus*	Hong and Saint-Jeannet (2007)
	BMP, Wnt	Promotes	Pax7	Chick	Litsiou et al. (2005), Patthey et al. (2008)
	FGF, Six1/Eya2	Represses	Pax7	Chick	Christophorou et al. (2009), Stuhlmiller and García-Castro (2012)
	Wnt	Promotes	Pax3	*Xenopus*	Bang et al. (1997), Hong and Saint-Jeannet (2007)
	BMP, Foxi1, Wnt	Promotes	Msx1	Chick, *Xenopus*	Suzuki et al. (1997), Wilson et al. (2001), Matsuo-Takasaki et al. (2005), Hong and Saint-Jeannet (2007)
	Dlx5 (Dlx3b/4b), FGF	Represses	Msx1	Chick	tuhlmiller and García-Castro (2012) McLarren et al. (2003)
	Ap2, BMP, Dlx5 (Dlx3b/4b), Foxi1, Gata2/3	Promotes	Dlx5 (Dlx3b/4b)	Chick, *Xenopus*	uo et al. (2001), McLarren et al. (2003), Matsuo-Takasaki et al.(2005), Kwon et al. 2010), Pieper et al. (2012)
	Six1/Eya2	Represses	Dlx5 (Dlx3b/4b)	Chick, *Xenopus*	Brugmann et al. (2004), Christophorou et al. (2009)
	BMP	Promotes	Ap2	*Xenopus* zebrafish	Luo et al. (200 h et al. (2010)
	BMP, Dlx5 (Dlx3b/4b), Gata2/3, Wnt	Promotes	Gata2/3	Chick, *Xenopus*	Wilson et al. (2 ilson et al. (2001), McLarren et al. (2003), Kwon et al. (2010), Pieper et al. (2012)
	FGF, Six1/Eya2	Represses	Gata2/3	Chick	Christophorou et al. (2009), Stuhlmiller and García-Castro (2012)
From blastula to nerula stages	BMP, Dlx5 (Dlx3b/4b), Gata 2/3	Promotes	Foxi1	*Xenopus*	o-Takasaki et al. (2005), Kwon et al. (2010), Pieper et al. (2012)
	Wnt	Represses	Foxi1	*Xenopus*	o-Takasaki et al. (2005)
	BMP, FGF, Wnt	Promotes	Irx1	*Xenopus*	roid et al. (1998), Gomez-Skarmeta et al. (1998); Glavic et al. (2004)
	FGF	Promotes	Otx2	Chick,	Wilson et al. (2001), Albazerchi and Stern (2007)
	BMP, Wnt	Represses	Otx2	Chick	Wilson et al. (2001), Albazerchi and Stern (2007)
	Ap2, c-Myc, Dlx5/6 (Dlx3a/4b)[a], FGF, Foxi1, Gata2/3, Irx1, Zic1-5	Promotes	Six1	Chick, medaka, *Xenopus*, zebrafish	Solomon and Fritz (2002); Bellmeyer et al. (2003); Woda et al. (2003), Brugmann et al. (2004), Glavic et al. (2004), Ahrens and Schlosser (2005), Litsiou et al. (2005), Aghaallaei et al. (2007), Hong et al. (2007), Esterberg and Fritz (2009), Sato et al.(2010)[a]; Kwon et al. (2010); Pieper et al. (2012)
	BMP, Foxd3, Msx1[a], Pax3, Pax7, Wnt	Represses	Six1	Chick, *Xenopus*, zebrafish	Brugmann et al. (2004), Ahrens and Schlosser (2005), Litsiou et al. (2005); Philips et al. (2006), Hong et al. (2007), Kwon et al. (2010); Sato et al. (2010)[a]
	Ap2, Dlx5/6 (Dlx3a/4b), FGF, Foxi1, Gata2/3, Six1/Eya2	Promotes	Eya1/2	Chick, medaka, zebrafish	Solomon and Fritz (2002), Litsiou et al. (2005), Christophorou et al. (2009), Esterberg and Fritz (2009), Kwon et al. (2010), Pieper et al. (2012)
	BMP, Wnt	Represses	Eya1/2	Chick, *Xenopus*, zebraafish	Brugmann et al. (2004), Litsiou et al. (2005), Kwon et al. (2010)
	Ap2, Dlx5/6 (Dlx3a/4b), FGF, Foxi1, Gata2/3, Six1/Eya2	Promotes	Six4	Chick, *Xenopus*, zebrafish	McLarren et al. (2003), Litsiou et al. (2005), Christophorou et al. (2009), Esterberg and Fritz (2010) n et al. (2010), Pieper et al. (2012)
	BMP, Wnt	Represses	Six4	Chick, *Xenopus*, zebrafish	Brugmann 2004), Litsiou et al. (2005), Kwon et al. (2010)
	Six1/Eya2	Represses	Foxd3	*Xenopus*	Brugmann 2004)
PPR regionalization	Otx1/2/5	Represses	Gbx2	*Xenopus*	Steventon et al. (2012)
	Otx1/2/5	Promotes	Dmrt4	*Xenopus*	Steventon, et al., 2012
	Pax6[a], Otx1/2/5, Six1/Eya2, Six3[a]	Promotes	Pax6	Chick, mouse	Ashery-Padan et al. (2000)[a]; Liu et al. (2006)[a]; Christophorou et al. (2009), Steventon et al. (2012)
	TGFβ, Dlx5/6 (Dlx3b/4b), FGF, Pax3, Wnt	Represses	Pax6	Chick, mouse	Bhattacharyya et al. (2004), Smith et al. (2005), Bailey et al. (2006); Grocott et al. (2011), Wakamatsu (2011)
	Pax6	Promotes	Six3	Mouse	Ashery-Padan et al. (2000)
	FGF, Pax3, PDGF, Six1/Eya2, Wnt	Promotes	Pax3	Chick	Lassiter et al. (2007), Canning et al. (2008), McCabe and Bronner-Fraser (2008), Christophorou et al. (2009), Dude et al. (2009)
	Pax6	Represses	Pax3	Chick	Wakamatsu (2011)
	Pax3	Promotes	Eya2	Chick	Dude et al. (2009)
	TGFβ	Promotes	Wnt2b	Chick	Grocott et al. (2011)
	FGF, Foxi1	Promotes	Dlx5/6 (Dlx3b/4b)	Chick, zebrafish	Nissen et al. (2003), Solomon et al. (2003), Hans et al. (2004); Litsiou et al. (2005), Bailey et al. (2006), Hans et al. (2007), Pieper et al. (2012)
	Dlx5/6 (Dlx3b/4b), FGF, Wnt	Promotes	Foxi1	*Xenopus*, zebrafish	Nissen et al. (2003), Hans et al. (2004); Philips et al. (2004), Hans et al. (2007), Pieper et al. (2012)
	Pax2, Pax8	Represses	Foxi1	Zebrafish	Padanad and Riley (2011)
	Gbx2, Pax3	Represses	Otx1/2/5	*Xenopus*	Steventon et al. (2012)
	FGF, Foxi1, Wnt	Promotes	Pax8	*Xenopus*, zebrafish	Philips et al. (2001), Leger and Brand (2002), Nissen et al. (2003), Solomon et al. (2003), Hans et al. (2004), Philips et al. (2004); Mackereth et al. (2005); Hans et al. (2007); Park and St Jeannet (2008), Padanad and Riley (2011)
PPR regionalization	Dlx5/6 (Dlx3b/4b), Gbx2, FGF, Six1/Eya2	Promotes	Pax2	Chick, mouse, *Xenopus*, zebrafish	ler et al. (2000); Philips et al. (2001); Leger and Brand (2002); Maroon et al. 2); Solomon and Fritz (2002); Nissen et al. (2003); Solomon et al. (2003); Wright Mansour (2003); Hans et al. (2004); Philips et al. (2004); Solomon et al.(2004); Mackereth et al. (2005); Bricaud and Collazo (2006); Hans et al. (2007); Sun et al. (2007); Freter et al. (2008); Christophorou et al. (2009); Padanad and Riley (2011); Steventon et al. (2012)
	Pax3	Represses	Pax2	Chick	Dude et al. (2009)
	Pax2[a]	Promotes	Six1	Zebrafish	Bricaud and Collazo (2006); Sato et al. (2012)[a]

[a] Gene names are colour-coded according to their expression domain as indicated in Fig. 2 using the same colours as in the network figures.

UNCORRECTED PROOF

Please cite this article as: Grocott, T., et al., The peripheral sensory nervous system in the vertebrate head: A gene regulatory perspective. Dev. Biol. (2012), http://dx.doi.org/10.1016/j.ydbio.2012.06.028

Six and *Eya* genes were initially identified in *Drosophila* as *sine oculis* (*So*) and *eyes absent* (*Eya*), where they are part of the non-linear network of retinal determination genes. *So* and *Eya* loss of function mutations in the fly cause reduction or complete absence of the eye, while their misexpression leads to ectopic eye formation demonstrating their crucial role for fly eye development (Bonini et al , 1993, 1997; Chen et al., 1997; Cheyette et al., 1994; Mardon et al., 1994; Pignoni et al., 1997a, 1997b; Serikaku and O'Tousa, 1994; Weasner et al., 2007). While it was generally assumed that *Drosophila* So acts as a transcriptional activator during eye formation, recent evidence suggests that a key role of So is to repress the antennal selector gene *Cut* (Anderson et al., 2012): misexpression of a constitutive repressor form of So, but not of a constitutive activator, is able to induce ectopic eyes in the antennal disc. Thus, a revised model for retinal determination emerges in which So plays a dual role downstream of the Pax6 homolog Eyeless: together with a yet-to-be-identified co-repressor it inhibits non-retinal fates and promotes eye formation when partnered with Eya. Among the genes activated by So and Eya is the *ski*/*sno* related transcriptional co-factor *Dac* and together they form a regulatory loop to promote each others' expression and retina development (Chen et al., 1997; Davis et al., 1999; Hammond et al., 1998; Mardon et al., 1994; Shen and Mardon, 1997). Likewise, recent vertebrate data suggest a similar mode of action for Six proteins in vertebrate placode development (see below).

As their widespread expression in all sensory placode progenitors suggests, vertebrate Six and Eya proteins not only play important roles in eye formation, but in all other sensory structures in the head. The loss of Six1, Six5, Eya1 and/or Eya4 function causes defects in the eye, the ear, the cranial ganglia and the olfactory epithelium (Chen et al., 2009; Friedman et al., 2005; Konishi et al., 2006; Kozlowski et al., 2005; Laclef et al., 2003; Li et al., 2003; Ozaki et al., 2004; Xu et al., 1999; Zheng et al., 2003; Zou et al., 2004, 2006). Similarly, human mutations in these genes have been associated with Branchio-Oto-Renal syndrome where patients present hearing, renal and branchial defects, with late-onset deafness and lens cataract (Abdelhak et al., 1997; Azuma et al., 2000; Johnson et al., 1999; Ruf et al., 2004; Schonberger et al., 2005; Wayne et al., 2001; Winchester et al., 1999; Zhang et al., 2004). At early developmental stages, *Six* and *Eya* genes play an important role in specifying sensory progenitors at the border of the neural plate. Six1 knock down or misexpression of a constitutive Six1 repressor form leads to the absence of placode progenitors, while misexpression of wild type Six1 promotes PPR identity at the expense of epidermis and neural crest (Brugmann et al., 2004; Christophorou et al., 2009). Like in the fly, Six1 seems to associate with transcriptional repressors or activators: repression of non-placodal fate involves Groucho repressors, while association of Six1 with Eya1/2 favours placode fates. The activation of Six1 target genes is required for normal expression of placode-specific *Pax* genes (Fig. 5), which in turn appear to determine placode identity. This is in contrast to *Drosophila*, where the Pax6 homologue *Eyeless* (*Ey*) acts upstream of *So* and *Eya* and is required for their expression (for review: Donner and Maas, 2004). This inversed regulatory relationship may explain why, unlike in the fly, where So and Eya induce ectopic eyes, misexpression of Six1 and Eya2 in competent non-placodal ectoderm does not induce mature ectopic placodes (Christophorou et al., 2009). With at least three different Pax genes downstream of Six/Eya (Pax2, 3 and 6) additional inputs must be required to provide regional specificity. Together these finding suggest that the Six and Eya network plays a critical role in specifying sensory progenitors and defines their regulatory state, but that additional factors that work in parallel or downstream are required for sense organ formation.

Transcription factors upstream of the *Six* and *Eya* network

How are sensory progenitors positioned at the border of the neural plate? We will analyze the upstream events by dissecting the core transcription factor network involved in the activation of *Six* and *Eya*. The PPR is first identified at neural plate stages, shortly after induction of the central nervous system and after or concomitant with neural crest cell specification. The subdivision of the ectoderm into different domains occurs sequentially starting from pre-gastrula stages, a process that is not very obvious in anamniotes because of their extremely fast development. The "neural plate border" and "binary competence" models have recently been discussed as two opposing models for PPR induction (Pieper et al., 2011; Schlosser, 2006); however, we argue that considering the temporal hierarchy of events unifies both models. Below we review this sequence of events and the molecular cascade that controls them to explain how sensory progenitors are uniquely positioned, surrounding the anterior neural plate.

Among the transcription factors that regulate *Six* and *Eya* gene expression are members of the Dlx family, which play multiple roles in ectodermal patterning. Before we discuss their function it is important to note that the nomenclature and expression/function of specific Dlx family members do not correspond across species. In amniotes for example, *Dlx3* is neural-enriched during gastrulation and is later confined to the olfactory placode (Bhattacharyya and Bronner-Fraser, 2008; Khudyakov and Bronner-Fraser, 2009). Conversely in *Xenopus*, *Dlx3* expression is non-neural and resembles that of *Dlx5*, yet they remain functionally distinct: *Dlx5* is activated downstream of *Dlx3* (Pieper et al., 2012). Amniote *Dlx6* expression overlaps that of *Dlx5*, but its function has yet to be studied within the PPR (Brown et al., 2005). Zebrafish exhibits further differences to both amniotes and *Xenopus*, partly due to gene duplications within the Dlx family. To avoid over-complicating the network model with unresolved cross-species discrepancies, we have elected to treat amniote *Dlx5/6*, *Xenopus Dlx3/5* and teleost *Dlx3b/4b* collectively as "*Dlx5/6 (Dlx3b/4b)*" whereas amniote *Dlx3* is set apart. Accordingly, we acknowledge that critical details of Dlx gene function have been omitted from our present model. Further studies, in particular cross-species analysis of cis-regulatory elements for all Dlx family members, will need to resolve these differences.

Subdivision of the ectoderm by sequential activation of transcription factors

At blastula stages, the embryonic region is characterised by the expression of pre-neural (*Sox3*, *Otx2*, *ERNI*, *Geminin*; Bally-Cuif et al., 1995; Kroll et al., 1998; Papanayotou et al., 2008; Rex et al., 1997; Streit et al., 2000) and non-neural genes (*Dlx* genes, *Gata2/3*, *Msx1*, *Ap2*, *Foxi1/3*; Brown et al., 2005; Hans et al., 2007; Hans et al., 2004; Hoffman et al., 2007; Knight et al., 2003; Li and Cornell, 2007; Luo et al., 2001a, 2001b; Matsuo-Takasaki et al., 2005; McLarren et al., 2003; Ohyama and Groves, 2004; Papalopulu and Kintner, 1993; Pera and Kessel, 1999; Pera et al., 1999; Phillips et al., 2006; Pieper et al., 2012; Sheng and Stern, 1999; Streit and Stern, 1999; Suzuki et al., 1997; Woda et al., 2003; Yang et al., 1998) in partially overlapping domains (Fig. 2).

Pre-neural factors are expressed more medially in the chick epiblast, while non-neural factors are enriched laterally. Likewise, in *Xenopus* pre-neural and non-neural factors initially overlap animally, but then become restricted to more dorsal and ventral regions, respectively (Pieper et al., 2012). Although little is known about their regulatory interactions at this stage, some of the signalling inputs have been identified (Fig. 3). *Sox3*, *ERNI* and *Geminin* expression is initiated by FGF signalling, while *Otx2* requires a combination of FGF activation and Wnt and BMP antagonists

Please cite this article as: Grocott, T., et al., The peripheral sensory nervous system in the vertebrate head: A gene regulatory perspective. Dev. Biol. (2012), http://dx.doi.org/10.1016/j.ydbio.2012.06.028

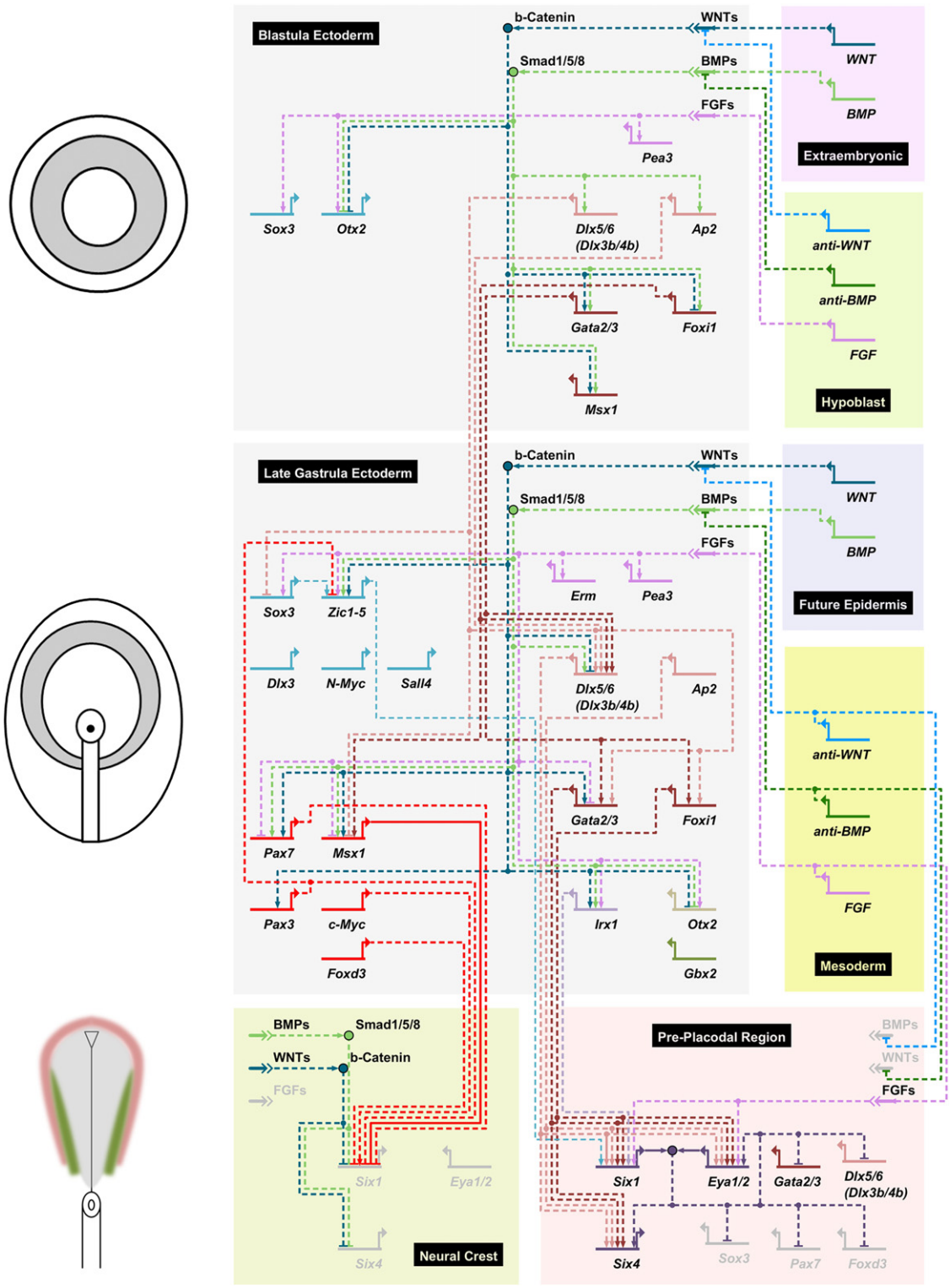

Fig. 3. Gene regulatory interactions establishing the pre-placodal territory. Signalling and transcription factor interactions are shown from blastula and to neurula stages. Diagrams on the left show the corresponding stages in the chick embryo; regions are colour-coded according to the regulatory state described in the network. Neural and non-neural gene expression domains in the pre-streak epiblast (blastula) are established through signals from the hypoblast and extraembryonic region. At gastrula stages, different transcription factors are initiated downstream at the border of the neural plate. At head process stages, Six and Eya genes become expressed in the pre-placodal region, but are repressed in future neural crest cells. Note: as shown in Fig. 2 gene expression domains do not yet form sharp boundaries at this stage. Gene symbols are colour-coded according to their expression profiles summarised in Fig. 2. Progenitor populations (boxes) are colour-coded according to their physical distributions summarised in Fig. 1. In the network, solid lines represent verified direct interactions, while this information is not known for interactions represented in dashed lines. For a neural crest GRN see (Betancur et al., 2010a; Sauka-Spengler and Bronner-Fraser, 2008).

(Albazerchi and Stern, 2007; Papanayotou et al., 2008; Streit et al., 2000; Wilson and Edlund, 2001). Accordingly, the Ets family member *Pea3*, a transcriptional target of FGF signalling, is expressed widely in the embryonic region (Lunn et al., 2007). In amniotes, these signals emanate from the hypoblast (anterior visceral endoderm in mouse), which underlies the embryonic region (for

review: Stern and Downs, 2012). In contrast, *Dlx5/6*, *Gata2/3*, *Msx1*, *Foxi1* and *Ap2* depend on BMP activity with *Gata2* and *Msx1* also being positively regulated by canonical Wnt signalling, while this pathway inhibits *Foxi1* and *X-Dlx3* (Beanan et al., 2000; Hoffman et al., 2007; Hong and Saint-Jeannet, 2007; Kwon et al., 2010; Matsuo-Takasaki et al., 2005; Pera et al., 1999; Suzuki et al., 1997; Wilson et al., 2001). Accordingly, members of the BMP and Wnt families are expressed in the extraembryonic ectoderm adjacent to the non-neural domain or in the non-neural ectoderm itself (Skromne and Stern, 2001; Streit et al., 1998; Wilson et al., 2001). Recent data from zebrafish define a clear time window for BMP activity (Kwon et al., 2010): *Gata2*, *Foxi1* and *Ap2* require BMP signalling before but not after gastrulation. Thus, prior to gastrulation, antagonistic activity between FGF and Wnt/BMP signalling roughly subdivides the embryonic region into pre-neural and non-neural territories with a large region of overlap (Figs. 2 and 3).

During gastrulation these territories become further subdivided molecularly as new genes are expressed and relative expression boundaries change (Fig. 2). At early gastrula stages, non-neural transcripts form two groups with *Gata2/3* and *Foxi1* being expressed more laterally than *Ap2*, *X-Dlx3* and *Dlx5/6*, whose expression abuts the neural plate (Feledy et al., 1999a; Khudyakov and Bronner-Fraser, 2009; Kwon et al., 2010; Luo et al., 2001b; Pieper et al., 2012; Streit, 2002; Woda et al., 2003). Unlike in fish and Xenopus, in chick *Dlx3* expression is similar to pre-neural genes (Khudyakov and Bronner-Fraser, 2009)). Surprisingly, genes previously considered as neural crest specifiers like *FoxD3* and *N-myc* are transiently coexpressed with pre-neural transcripts before being confined to the neural crest domain (Khudyakov and Bronner-Fraser, 2009) suggesting that at early stages a common regulatory state may define progenitors for both lineages. In addition to *Pea3*, the Ets transcription factor *Erm* is now also present in the forming neural plate and the surrounding ectoderm (Lunn et al., 2007) as are *Zic1-5* (Elms et al., 2004; Elms et al., 2003; Gamse and Sive, 2001; Inoue et al., 2007; Merzdorf, 2007; Mizuseki et al., 1998; Nakata et al., 1997, 1998), *Dlx3* (in chick; Khudyakov and Bronner-Fraser, 2009), *Sall1* (Bohm et al., 2008; Sweetman et al., 2005) and *Spalt4* (or Sall4; Barembaum and Bronner-Fraser, 2007). In *Xenopus*, *Zic1* and *Zic5* are activated at the edge of the neural plate in response to FGF signalling presumably from the underlying paraxial mesoderm (Hong and Saint-Jeannet, 2007; Monsoro-Burq et al., 2003); in tissue recombination assays paraxial mesoderm can induce *Zic5* in animal caps, but this is blocked in caps injected with dominant negative FGF receptor (Monsoro-Burq et al., 2003). In addition, at intermediate levels of BMP activity Wnt signalling also activates *Zic1* (Hong and Saint-Jeannet, 2007). Thus, different pathways converge on Zic1 (Fig. 3), while nothing is known about the signals that induce *cDlx3*, *Spalt4* and *Sall1* in the neural plate or at its border.

At late gastrula stages, the definitive neural marker *Sox2* is initiated in the neural plate in response to neural inducing signals from the organiser (Rex et al., 1997; Streit et al., 1997; Uchikawa et al., 2003). Neural and non-neural transcripts continue to overlap in a broad territory, named 'the border' of the neural plate (Moury and Jacobson, 1989; Streit and Stern, 1999; Zhang and Jacobson, 1993), and it is in this region that precursors for neural, neural crest, placodes and epidermis are intermingled (Ezin et al., 2009; Fernandez-Garre et al., 2002; Garcia-Martinez et al., 1993; Hatada and Stern, 1994) and *Irx1*, one of the *Six* and *Eya* upstream regulators, is switched on under the influence of BMP and FGF signalling (Bellefroid et al., 1998; Glavic et al., 2002; Gomez-Skarmeta et al., 1998; Goriely et al., 1999; Khudyakov and Bronner-Fraser, 2009) (Figs. 2 and 3).

Simultaneously, distinct anterior–posterior territories are set up in the embryonic region (Fig. 2). *Otx2* and *Gbx2* are among the first genes that roughly separate the embryonic region into rostral and caudal domains with *Otx2* beginning to localise anteriorly and *Gbx2* posteriorly (Acampora et al., 1995; Bally-Cuif et al., 1995; Braun et al., 2003; Broccoli et al., 1999; Gammill and Sive, 2000; Glavic et al., 2002; Li et al., 2009; Millet et al., 1999). Both genes continue to overlap until they form a sharp boundary at early somite stages (Steventon et al., 2012). In chick, *Msx1*, *Pax3* and *c-Myc* expression begins next to the primitive streak, initially widespread encompassing the non-neural ectoderm but then rapidly localising to a few rows of cells lining the posterior neural plate (Bang et al., 1997; Khudyakov and Bronner-Fraser, 2009; Streit and Stern, 1999). Like at pre-gastrula stages, FGF signalling negatively regulates *Msx1* and *Gata2* preventing their expression in more medial, neural territory (Stuhlmiller and García-Castro, 2012). Shortly thereafter, the neural crest specifier *Pax7* is initiated within the Msx1/Pax3 territory (Basch et al., 2006) and over the next few stages, all three genes expand to encompass most of the anterior neural plate in a thin line. Recent evidence in chick suggests that already at gastrula stages posterior Pax7^{+} and anterior Pax7^{-}cells are specified as neural crest cells (Basch et al., 2006; Patthey et al., 2008) indicating that specification of the neural plate border and neural crest may be regulated by different mechanisms along the rostrocaudal axis.

In summary, BMP and Wnt signalling activate early expressed non-neural factors, while FGFs prevent their expression close to the neural plate and initiate pre-neural genes (Fig. 3). As a result, partially overlapping domains of transcription factors define distinct regulatory states within the ectoderm (Fig. 2): neural, epidermal and the border in between. The latter begins to be subdivided molecularly into *Ap2/Dlx3/5/6* positive and negative regions during gastrulation. These dynamic changes highlight the importance of timing when interpreting experimental manipulations as some markers label different cells at different times. There are few, if any systematic studies investigating many transcription factors simultaneously making it difficult to integrate data from different studies and across species. Thus, our knowledge of the regulatory interactions among these factors is still sparse and none of the critical regulator elements have been identified.

Restricting neural fate: repression by non-neural transcription factors

One important function of the early, non-neural genes appears to be the restriction of neural fates by repressing neural markers (Fig. 3). In *Xenopus*, overexpression of Foxi1a represses the neural marker *Sox2*, but promotes non-neural genes like *X-Dlx3* and epidermal keratin (Matsuo-Takasaki et al., 2005). In contrast, loss of Foxi1a leads to *Sox2* expansion and reduction of *Dlx3*, *Msx1* and epidermal keratin (Kwon et al., 2010; Matsuo-Takasaki et al., 2005). These observations suggest that Foxi1 lies upstream of Dlx3 and Msx1. However, loss- and gain-of-function experiments for Dlx3, Dlx5, Gata2/3, Msx1 and Ap2 suggest more complex regulatory relationships. Misexpression of any of these factors represses neural fate (*Sox2* and/or *-3*), while knock-down or misexpression of dominant negative forms enlarges the neural plate (Feledy et al., 1999a; Linker et al., 2009; Luo et al., 2001b; McLarren et al., 2003; Pieper et al., 2012; Suzuki et al., 1997; Tribulo et al., 2003; Woda et al., 2003). Since these factors are thought to act as transcriptional activators it is likely that their interaction with neural genes is indirect, mediated by yet unknown transcriptional repressors. In addition, they regulate each other: in zebrafish, both Gata3 and Ap2 are required for *Dlx3* expression, while in *Xenopus* Dlx3 and Gata2 regulate their own expression and that of *Dlx5* and *Foxi1a* (Kwon et al., 2010; Pieper et al., 2012). Thus, positive feedback loops reinforce the expression of these transcription factors in the non-neural ectoderm

UNCORRECTED PROOF

Please cite this article as: Grocott, T., et al., The peripheral sensory nervous system in the vertebrate head: A gene regulatory perspective. Dev. Biol. (2012), http://dx.doi.org/10.1016/j.ydbio.2012.06.028

possibly making them independent of further signalling input (Fig. 3).

In the posterior non-neural ectoderm, Pax3 is positively regulated by canonical Wnt signalling (Bang et al., 1997; Hong and Saint-Jeannet, 2007) and also antagonises neural specification: its overexpression reduces *Sox2* expression, while Pax3 knock-down expands both *Sox2* and *Zic1* (Hong and Saint-Jeannet, 2007). Interestingly, Zic1 and Pax3 cooperate to promote neural crest cell fates later, while Zic1 alone favours placodal development suggesting that the balance between both factors is important to determine ultimate cell fates.

Thus, repressive action of non-neural genes limits the extent of the neural plate: they suppress neural specific transcription factors and reinforce their own expression (Fig. 3). Whether neural factors in turn repress non-neural fate at these early stages remains to be elucidated. The identification of regulatory modules of each factor will be crucial to determine whether these interactions are direct or indirect.

Transcriptional input into the Six and Eya network

At neurula stages, the expression of Six and Eya family members is first initiated with their PPR-specific expression being regulated by both pre-neural and non-neural transcription factors, together with the earliest known border-specific factor *Irx1* (Figs. 2 and 3). The Dlx family members X-Dlx3 and Dlx5 (and presumably Dlx6, which is co-expressed with Dlx5) continue to play a role in addition to antagonising neural specification (Luo et al., 2001b; McLarren et al., 2003; Pieper et al., 2012; Woda et al., 2003). However, differential expression of the family members suggests a complex role. In Xenopus, *Dlx5* continues to abut the neural plate at early neurula stages like in chick (Beanan and Sargent, 2000; Feledy et al., 1999a; Khudyakov and Bronner-Fraser, 2009; Luo et al., 2001b; McLarren et al., 2003; Streit, 2002), while *Dlx3* (and *Dlx3b/4b* in fish) is absent from the future neural crest domain (Kwon et al., 2010; Luo et al., 2001b; Pieper et al., 2012).

Misexpression of *Dlx5* in chick or *Dlx3* in *Xenopus* represses neural crest fates, while promoting the expression of the pre-placodal markers *Six1/4* and *Eya1*. In contrast, Dlx3 knock-down or misexpression of a dominant negative form results in the loss of pre-placodal and crest markers. Similarly, in zebrafish the absence of *dlx3b* and *-4b* function (b380 mutants or morphants) causes the loss of PPR markers and a reduction of olfactory, trigeminal and otic placodes, while dlx3b overexpression leads to an enlarged PPR (Esterberg and Fritz, 2009; Kaji and Artinger, 2004; Solomon and Fritz, 2002). Thus, Dlx proteins are required for PPR specification and promote PPR specific gene expression. Indeed, recent studies implicate X-Dlx3 as competence factor for sensory progenitors: Dlx3 function is required for PPR induction by FGF and BMP antagonists (Pieper et al., 2012). In agreement with these findings, Dlx5 activates *Six1* expression by directly binding to its anterior PPR enhancer (Six1-14; Sato et al., 2010). Together, these experiments implicate Dlx family members as important upstream regulators of Six genes and mediators of placodal development.

The function of Dlx proteins during neural crest cell specification appears to be more complex. First, different Dlx family members show slightly different expression patterns in *Xenopus*, with *Dlx5* encompassing epidermal, placodal and crest territories, while *Dlx3* is absent from neural crest cells (Luo et al., 2001a). Second, while Dlx5, but not Dlx3 has been implicated in neural crest cell formation (Feledy et al., 1999b; Luo et al., 2001a), a recent study shows that both gain and loss of Dlx3 function reduce neural crest markers (Pieper et al., 2012), while in fish, Dlx3b/4b may control neural crest cell formation in a non cell autonomous manner (Kaji and Artinger, 2004). These observations suggest that a fine balance of Dlx protein function is required for normal crest development. This balance may be achieved through interaction with Msx1 proteins, which show partially overlapping expression. Msx and Dlx proteins can form heterodimers to modulate their action as transcriptional repressors or activators (Zhang et al., 1997). Thus, Dlx protein function may differ depending on the amount of Msx1 present. In addition, as mediator of BMP signalling and epidermal specification, Msx1 inhibits PPR fate: in the absence of Dlx3b/4 function, knock-down of MsxB, C and E in zebrafish restores placode development (Phillips et al., 2006). In agreement with this, Msx1 binds to the anterior PPR enhancer of Six1 and negatively regulates its expression.

Two recent studies in zebrafish and *Xenopus* have identified Ap2, Foxi1 and Gata2/3 as important regulators and potential competence factors for pre-placodal genes (Kwon et al., 2010; Pieper et al., 2012). Knock-down of one or more of these factors leads to loss of *Six1/4* and *Eya1* expression, while overexpression alone or in combination results in ectopic expression of PPR specifiers. Importantly, like Dlx3 the presence of these factors is required for PPR induction by FGF signalling in combination with BMP antagonists (see below) providing strong evidence for their role as competence factors. Thus, while Ap2 and Dlx family members are required for both PPR and neural crest cell specification, Foxi1 and Gata2/3 only regulate placodal fate. Thus, although the genes that specify neural crest and placode precursors are regulated differentially they also share some transcriptional input. In summary, members of the Foxi1, Gata, Dlx and Ap2 family play a role in demarcating the boundary between neural and non-neural ectoderm and are critical regulators of PPR fate (Fig. 3).

Much less is known about the role of other pre-neural and non-neural factors in regulating PPR specific transcripts. In Xenopus, Sox3 represses epidermal character, while promoting neural plate identity by inducing *Sox2*; both Sox proteins positively regulate neural *Zic1* and *Geminin* expression (Rogers et al., 2009). Placode-specific genes have not been investigated. In medaka, misexpression of Sox3 results in the formation of ectopic placodes within the PPR and may promote PPR gene expression, although this has not been examined systematically (Köster et al., 2000).

As discussed above, the three transcription factors *Pax3*, c-*Myc* and *Msx1* are first expressed along the posterior neural plate and later in neural crest cells. All three promote neural crest cell formation, but play different roles in placode specification. While c-Myc is required for the development of both neural crest and PPR as shown in knock-down studies in *Xenopus* (Bellmeyer et al., 2003), Msx1 and Pax3 negatively regulate PPR specific genes (Hong and Saint-Jeannet, 2007). In zebrafish, sensory progenitors depend on Dlx3b/4b function; however, their specification is rescued when MsxB, C and D are knocked down in Dlx3b/4b mutants (Esterberg and Fritz, 2009; Kaji and Artinger, 2004; Phillips et al., 2006; Solomon and Fritz, 2002). In agreement with this observation, Msx1 negatively regulates the anterior PPR Six1 enhancer (Sato et al., 2010). As a direct target of BMP signalling (Maeda et al., 1997; Suzuki et al., 1997; Yamamoto et al., 2000) Msx1 may mediate placode inhibition by BMPs (see below). Likewise, overexpression of Pax3 represses *Six1* in the PPR and as a canonical Wnt target (Hong and Saint-Jeannet, 2007; Monsoro-Burq et al., 2005), Pax3 may mediate its activity to repress placode formation (see below). It therefore seems likely that at early gastrula stages, when *Pax3* and *Msx1* are present in the posterior non-neural ectoderm, they restrict *Six1* expression to the head ectoderm, while at neurula stages, when both are present in the neural folds, where neural crest cells are located, they prevent *Six1* expansion into the crest territory.

UNCORRECTED PROOF

Please cite this article as: Grocott, T., et al., The peripheral sensory nervous system in the vertebrate head: A gene regulatory perspective. Dev. Biol. (2012), http://dx.doi.org/10.1016/j.ydbio.2012.06.028

At the neural plate border, *Pax3* and *Zic1* are expressed in partially overlapping domains and their balance may control the decision between placodal versus neural crest fates (Hong and Saint-Jeannet, 2007; Monsoro-Burq et al., 2005). In the absence of Zic1 function, *Six1* expression is lost, but only in the lateral PPR (Hong and Saint-Jeannet, 2007), while Zic1 overexpression shows conflicting results. Whereas some studies show enhanced *Six1* expression in the PPR (Hong and Saint-Jeannet, 2007; Li et al., 2009), others report *Six1* loss (Brugmann et al., 2004). Thus, Zic1 function is context dependent and appears to switch from a positive to a negative regulator of placode precursor specification depending on the presence of other transcription factors like Pax3.

Finally, *Irx1*, a member of the TALE family of homeodomain proteins, is expressed in the PPR just prior to the onset of *Six1/4* and *Eya1/2* and later in the placodes themselves (Glavic et al., 2002; Gomez-Skarmeta et al., 1998; Goriely et al., 1999; Khudyakov and Bronner-Fraser, 2009). In *Xenopus*, overexpression of Xiro1 enhances *Six1* expression, while Xiro1 loss reduces it (Glavic et al., 2004), suggesting that Irx1 is a positive regulator of *Six1*. Since Irx1 itself is activated by FGF and BMP signalling (Bellefroid et al., 1998; Glavic et al., 2004), but slightly later than the BMP-dependent placode competence factors (Gata2/3, Foxi1, Dlx3, Ap2), it is possible that Irx1 is a downstream mediator of these factors. Alternatively it may cooperate with Foxi1: while *Foxi1* expression initially encompasses the entire non-neural ectoderm at neural stages it becomes confined to the PPR concomitant with the onset of Irx1.

In summary (Fig. 3), Gata, Foxi1, Dlx and Ap2 proteins have been implicated as competence factors required cell autonomously for the expression of PPR specific genes of the Six and Eya families. Likewise, Irx1 and Zic1 positively regulate *Six1* expression, while the neural crest specifiers Pax3 and Msx1 repress its transcription. So far only Dlx and Msx proteins have been shown to interact directly with the Six1 anterior PPR enhancer to provide positive and negative input, respectively. However, overall the regulatory interactions that control PPR-specific expression of Six1/4 and Eya1/2 remain poorly understood.

Stabilising sensory progenitor fate: positive feedback loops and repression of alternative fates

Once Six and Eya genes are initiated in the PPR they act to stabilise the system by promoting sensory progenitor fate and repressing non-placodal character (Fig. 3). Misexpression of Six1 and Eya2 induces ectopic expression of another Six family member, *Six4*, as well as *Eya2* itself (Christophorou et al., 2009). Unlike Six1, the Six4 protein contains a transactivation domain in addition to the homeo- and six-domain (Kawakami et al., 1996; Kawakami et al., 2000) and may therefore activate target genes independent of other co-activators. Thus, in a positive feedback loop Six and Eya proteins promote their own expression, although it is unclear whether they do so by directly binding to their enhancers or via other factors like Six4.

Simultaneously, they repress genes characteristic for other cell fates including their own competence factors. For example, while Gata3 and Dlx5 are necessary for initiating *Six1* and *Eya1* in the PPR (Kwon et al., 2010; Pieper et al., 2012), once expressed Six1 and Eya1/2 repress both genes cell autonomously to prevent cells from adopting non-placodal fate (Brugmann et al., 2004; Christophorou et al., 2009). In addition, *Dlx5* and *Gata3* are induced ectopically in neighbouring cells suggesting that the Six/Eya complex activates a signalling pathway cell autonomously, which in turn regulates gene expression in neighbouring tissue. Whether Six/Eya activate a transcriptional repressor or whether Six1 associates with a co-repressor (see above) to shut down Dlx5 and Gata3 transcription is currently unknown. However, in analogy to So activity in the fly eye it is possible that a repressor function of Six1 is key for the manifestation of placodal fate. Likewise, misexpression of Six1 alone or in combination with Eya2 represses the neural markers *Sox2* and *Sox3* as well as the neural crest specific genes *Pax7* and *FoxD3* in a cell autonomous manner.

Thus, a model emerges in which pre-neural and non-neural upstream factors activate *Six* and *Eya* expression next to the anterior neural plate to specify sensory progenitors (Fig. 3). A positive feedback loop of the Six/Eya complex subsequently ensures that once expressed these genes become independent of this upstream input, while cell autonomous repression of neural, non-neural and neural crest fate stabilises placode progenitor identity.

Signalling events upstream of the core PPR gene network

Signalling input into the Six and Eya network

A number of signalling pathways have been implicated in PPR specification and they appear to act sequentially during this process (Fig. 3). PPR inducing signals emanate from the underlying mesoderm and the adjacent neural plate: when grafted ectopically either tissue can induce *Six1*, *Six4* and *Eya2* (Ahrens and Schlosser, 2005; Litsiou et al., 2005). Both tissues express different members of the FGF family: *FGF4* and *FGF8* are present in the chick mesoderm, while *FGF8* is found in the anterior neural plate in *Xenopus* (Ahrens and Schlosser, 2005; Ohuchi et al., 2000; Shamim and Mason, 1999). As discussed above, FGF signalling promotes the expression of pre-neural genes (*Sox3*, *ERNI*, *Geminin*) prior to gastrulation and may continue to do so at the border of the neural plate. The future placode territory receives FGF signalling as evidenced by expression of the FGF targets *Pea3* and *Erm* as well as the presence of phosphorylated Erk (pErk) (Khudyakov and Bronner-Fraser, 2009; Lunn et al., 2007; Stuhlmiller and García-Castro, 2012). FGF signalling prevents the expansion of PPR-repressing factors (*Msx1*, *BMP4*) towards the neural plate (Stuhlmiller and García-Castro, 2012), thus providing a favourable environment for PPR specification. In addition, FGF8 is sufficient to induce *Eya2*, but not any other PPR specifier (Litsiou et al., 2005).

Loss-of-function approaches show that FGF signalling is necessary to establish the Six/Eya network within the PPR. In *Xenopus* FGF8 knockdown or misexpression of a dominant negative FGF-receptor prevents *Six1* expression (Ahrens and Schlosser, 2005; Brugmann et al., 2004), while in chick inhibition of FGF signalling abolishes the PPR-inducing ability of the mesoderm (Litsiou et al., 2005). The presence of pErk in future sensory progenitors from gastrula stages onwards suggests that FGF is an early signal in the cascade of events leading to PPR specification. Thus, FGFs clearly play an important role in sensory progenitor specification, but alone are not sufficient to induce all components of the core PPR network. While several studies implicated the FGF pathway in neural crest cell induction (LaBonne and Bronner-Fraser, 1998; Mayor et al., 1997; Monsoro-Burq et al., 2003, 2005; Stuhlmiller and García-Castro, 2012; Villanueva et al., 2002), a recent study in chick investigated the temporal aspects: FGF/MAPK signalling is required early for neural crest cell specification (Stuhlmiller and García-Castro, 2012). This raises the possibility that a primary role of FGF signalling may be to induce a 'border state', in which cells are competent to give rise to neural, neural crest and placodes, and thus poise the embryonic ectoderm for other signals that subsequently differentiate between these fates.

In contrast to FGF two other signalling pathways, canonical Wnt and BMP, negatively regulate the core PPR network. In chick *Wnt6* is expressed in the trunk ectoderm (Garcia-Castro et al.,

UNCORRECTED PROOF

Please cite this article as: Grocott, T., et al., The peripheral sensory nervous system in the vertebrate head: A gene regulatory perspective. Dev. Biol. (2012), http://dx.doi.org/10.1016/j.ydbio.2012.06.028

2002; Schubert et al., 2002), while *Wnt8c* emanates from lateral and post-otic mesoderm (Litsiou et al., 2005). Together, they limit the lateral and posterior extent of the PPR thus restricting sensory progenitors to the head ectoderm next to the neural plate. In chick and frog, misexpression of Wnt antagonists (Crescent, Frzb1) leads to lateral and posterior expansion of pre-placodal *Six1*, *Six4* and *Eya2* (Brugmann et al., 2004; Litsiou et al., 2005) but cannot elicit ectopic expression of these genes away from the endogenous PPR. Conversely, activation of the pathway by misexpression of Wnt8c, Wnt8 or constitutively active β-catenin abolishes the expression of all three genes (Brugmann et al., 2004; Litsiou et al., 2005).

Similar to Wnts, high levels of BMP activity suppress the core PPR network. *BMP4* and *BMP7* are expressed in most of the non-neural ectoderm (Fainsod et al., 1994; Streit et al., 1998), but antagonists from the underlying mesoderm and the PPR itself (Chapman et al., 2004; Esterberg and Fritz, 2009; Ogita et al., 2001; Rodriguez Esteban et al., 1999) block their activity to allow PPR specific gene expression. Recent results from zebrafish demonstrate that while BMP activity is required early to initiate the expression of competence factors, BMP signalling must be completely blocked for the PPR to be specified (Kwon et al., 2010). In chick, misexpression of the cell-autonomous BMP antagonist Smad6 causes an expansion of *Six4* and *Eya2*, but not of *Six1*, into the future epidermis (Litsiou et al., 2005). In *Xenopus* however, inhibition of BMP signalling by noggin or a dominant negative receptor does expand *Six1*, while BMP4 overexpression inhibits its expression (Ahrens and Schlosser, 2005). This apparent discrepancy in *Six1* regulation may be due to species-specific differences, to the particular antagonists used or to a difference in timing of the experiments. Regardless, these findings do agree that *Six1*, *Six4* and *Eya2* are inhibited by BMPs, although like with Wnt/β-catenin, inhibition of BMP alone is insufficient to induce an ectopic PPR (Ahrens and Schlosser, 2005; Litsiou et al., 2005).

Together these data demonstrate that sensory progenitors must be protected from inhibitory Wnt and BMP signalling. The underlying mesoderm provides both a favourable environment in the form of FGF and protective signals: it secretes FGFs and the Wnt and BMP antagonists *Cerberus* and *DAN* (Chapman et al., 2004; Ogita et al., 2001; Rodriguez Esteban et al., 1999; Shamim and Mason, 1999), while the PPR itself expresses the BMP antagonist *Crossveinless 2* (*Cv2*) (Esterberg and Fritz, 2009). Therefore, the primary role of canonical Wnt and BMP signalling is to suppress the core PPR network within the prospective epidermis and trunk ectoderm, while antagonists facilitate its expression by local reduction of BMP and Wnt activity.

Whether Six1, Six4 and Eya2 are directly activated or inhibited by FGF, Wnt and BMP signalling remains to be elucidated. The only PPR enhancer identified so far regulates *Six1* expression in anterior sensory progenitors and does not contain binding sites for downstream effectors of these signals (Sato et al., 2010). BMP-dependent *Six1* repression is likely to be mediated by the BMP effector Msx1, which directly binds to this enhancer. It is therefore possible that the loss of *Six1* disrupts the positive feedback loop that maintains *Eya2* and activates *Six4*. Therefore, *Six4* and *Eya2* may be indirect targets of BMP signalling with Eya2 being induced by FGF. Together these observations suggest that combinatorial activity of FGF and Wnt and BMP antagonists is required to activate the complete set of PPR specific genes. Indeed, combined overexpression of FGF8 and noggin induces ectopic *Six1* in the ventral ectoderm of *Xenopus* embryos (Ahrens and Schlosser, 2005), and misexpression of both Smad6 and Crescent together with exposure to exogenous FGF8 induces *Six4* in chick (Litsiou et al., 2005). Interestingly, in the latter experiment, when FGF signalling is inhibited shortly after initial exposure *Six4* expression continues unimpeded (Litsiou et al., 2005). Thus, transient FGF activity is sufficient to promote PPR specification supporting the idea that one of the main functions of FGF is to prime the tissue for further signalling input (see above) and that once expressed the Six/Eya network rapidly becomes independent of activating external signals.

Signals differentiating sensory placode and neural crest progenitors

At early neurula stages, cells at the edge of the neural plate appear to remain in an unstable, multi-potent state and retain the ability to respond to local signals and to differentiate accordingly. Placodal (*Six1/Six4/Eya2*) and neural crest (*Pax7*, *Msx1*, *FoxD3*) transcripts partially overlap (Fig. 2). Yet, they mutually repress each other: Six1 represses *Pax7* and *FoxD3*, while Pax7 and Msx1 repress *Six1* (Fig. 3) (Brugmann et al., 2004; Christophorou et al., 2009; Sato et al., 2010). It is possible that mutual repression prevents further specification until changes in the signalling landscape tip the balance and allow the two populations to diverge. In support of this idea, BMP and Wnt pathways appear to recapitulate their earlier activities to promote this process.

Recently a two-step model has been proposed for neural crest cell induction with the second phase requiring canonical Wnt and BMP signalling (Patthey et al., 2008; Steventon et al., 2009; Steventon and Mayor, 2012). In agreement with this, misexpression of Wnt antagonists expands *Six1, Six4* and *Eya2* at the expense of the neural crest specifier *Pax7* (Litsiou et al., 2005). However, PPR transcripts never encroach into the definitive neural crest territory possibly due to elevated BMP activity. In contrast, activation of Wnt signalling expands *Pax7* into the PPR, but not into the future epidermis, while repressing *Six1, Six4* and *Eya2*. Thus, in this context canonical Wnt may not only induce *Pax7* directly, but also indirectly by removing otherwise suppressive *Six1* and thus allow *Pax7* expansion within the PPR.

In summary, at the edge of the neural plate the level of BMP and Wnt signalling determines whether cells adopt neural crest or placodal fate. High levels of BMP and Wnt activity promote neural crest cell formation, while both pathways must be repressed for sensory progenitors to be specified.

Integrating FGF, BMP and Wnt signalling

How are these pathways integrated to generate distinct cell fates at the border of the neural plate? Extracellular BMP signals are transduced to the nucleus by Smad1/5/8 proteins following their phosphorylation by active receptor complexes (Massague, 1998; Wu and Hill, 2009). However, these receptor-regulated Smads are also targeted by other kinases including mitogen activated protein kinase (MAPK) and glycogen synthase kinase 3 (GSK3), which are effectors of FGF and canonical Wnt signalling, respectively (Fuentealba et al., 2007; Kretzschmar et al., 1997; for review: Eivers et al., 2008, 2009). Therefore, Smad1/5/8 are important hubs for integrating these and other signalling pathways suggesting that they also hold the key for signal integration during sensory progenitor specification. The mechanisms of how different pathways converge on Smads have been reviewed extensively elsewhere (Eivers et al., 2008, 2009). Briefly, in response to BMP signalling Smad1/5/8 are activated through phosphorylation at the C-terminal MH2 domain and subsequently accumulate in the nucleus, where they modulate gene expression together with other co-factors. Smad1/5/8 phosphorylation by MAPK largely occurs in the linker region and may prevent their accumulation in the nucleus thus inhibiting their transcriptional activity. In addition, this 'primes' them for further inhibitory phosphorylation by GSK3, which targets them for degradation via subsequent ubiquitination. Since GSK3 is inhibited by canonical Wnt signalling, Wnt activation effectively stabilises

UNCORRECTED PROOF

Please cite this article as: Grocott, T., et al., The peripheral sensory nervous system in the vertebrate head: A gene regulatory perspective. Dev. Biol. (2012), http://dx.doi.org/10.1016/j.ydbio.2012.06.028

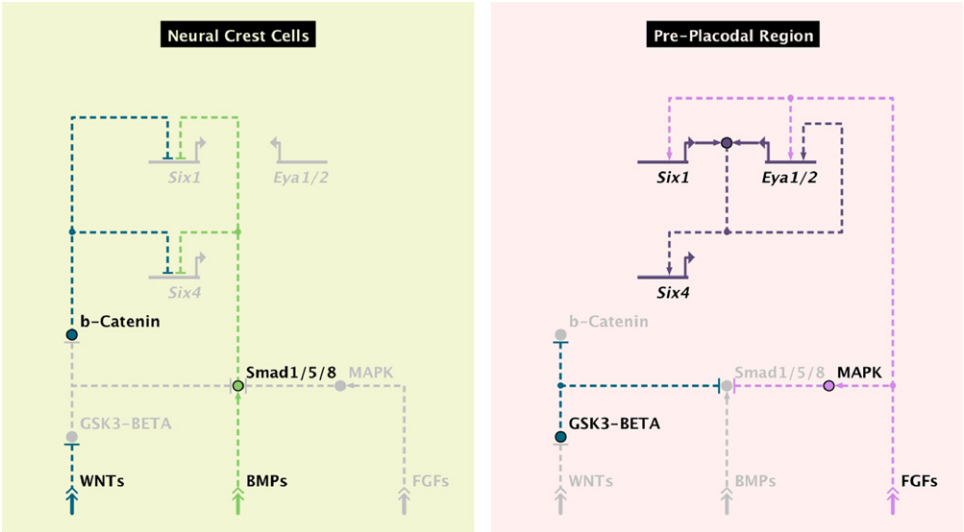

Fig. 4. Integration of signalling pathways in placode and neural crest progenitors. The possible mode of FGF, BMP and Wnt signal integration in the neural crest and placode territory.

Smad1/5/8. This synergy between the BMP and Wnt pathway is consistent with their role in sensory progenitor specification: both suppress the PPR network (Fig. 4). Conversely, FGF/MAPK signalling initiates the inhibitory cascade and opposes BMP signalling consistent with its positive role in PPR specification and activation of the PPR network (Fig. 4). Thus, activation of FGF signalling in the PPR cooperates with extracellular BMP and Wnt antagonists to inhibit both pathways and to generate a signalling environment that favours activation of the Six/Eya network and consequently sensory progenitor specification.

Regionalisation of the PPR

Although the PPR appears to be a homogeneous territory with uniform *Six/Eya* gene expression and a universal lens 'ground state', rostro-caudal patterning is already well under way at the time of its induction. Among the earliest regionally restricted genes are *Otx2* and *Gbx2* (Acampora et al., 2001; Acampora et al., 1995; Bally-Cuif et al., 1995; Li et al., 2009; Simeone et al., 1992; Simeone et al., 1993; Tour et al., 2001; von Bubnoff et al., 1996) (Fig. 2); both transcripts overlap initially, but form a boundary later separating otic from maxillomandibular trigeminal progenitors (Steventon et al., 2012). This boundary is established by mutual repression at the transcriptional level and Otx2/Gbx2-mediated cell sorting to sharpen the boundary (Steventon et al., 2012). A similar mechanism acts in the neural plate to establish the mid-hindbrain boundary (Broccoli et al., 1999; Glavic et al., 2002; Hidalgo-Sanchez et al., 2005; Joyner et al., 2000; Katahira et al., 2000; Li and Joyner, 2001; Millet et al., 1999; Wassarman et al., 1997), suggesting that Otx2 and Gbx2 are part of a general mechanism that allocates rostro-caudal identity across the entire ectoderm.

From neurula stages onwards, the induction of different transcription factors in distinct rostro-caudal domains demarcates the subdivision of the placode territory, first into larger regions contributing to multiple placodes and later into individual placodes each with a unique transcription factor code. These changes in gene expression have recently been reviewed extensively elsewhere (Schlosser, 2006). Here we summarise the earliest steps of anterior–posterior patterning with particular focus on the regulation and role of paired box family transcription factors, the Pax genes (Fig. 5). At some point during placode development (differing depending on species) the combined expression of *Pax6*, *Pax3* and *Pax2/8* spans the entire placode territory suggesting that they play a key role in allocating regional identity to placode progenitors. While none of the regulatory elements that control Pax gene expression in PPR sub-domains have been identified, all require direct or indirect transcriptional input from the Six and Eya network (Christophorou et al., 2009) again highlighting the important role of these genes for placode formation.

The anterior PPR: adenohypophysis, olfactory and lens progenitors

Surprisingly, the apparent uniform expression of *Six1* is regulated by at least two different enhancers, with the anterior PPR enhancer (Six1-14; Sato et al., 2010) encompassing adenohypophyseal, olfactory and lens precursors (Bhattacharyya et al., 2004; Dutta et al., 2005; Kozlowski et al., 1997; Pieper et al., 2011). Activation of this enhancer occurs at neurula stages within a broader *Otx2* domain, just prior to or concomitant with the initiation of *Pitx3* (Dutta et al., 2005) and *Six3* (Liu et al., 2006) within the Six1-14 domain and with *Pax6* (Bailey et al., 2006; Li et al., 1994) in a slightly larger territory, which initially also seems to include trigeminal precursors. This territory of overlapping gene expression in the anterior PPR contains cells with identical developmental potential and can give rise to any anterior placode if exposed to appropriate signals (Fig. 5). Such signals arise from surrounding tissues to induce distinct placodal fates locally. Hedgehog signalling from the midline promotes anterior pituitary character, while repressing lens and olfactory fates: in the absence of hedgehog the latter expand, whereas ectopic activation represses lens formation (Cornesse et al., 2005; Dutta et al., 2005; Herzog et al., 2004; Karlstrom et al., 1999; Kondoh et al., 2000; Sbrogna et al., 2003; Varga et al., 2001; Zilinski et al., 2005). FGFs from the anterior neural ridge promote olfactory identity, while repressing lens (Bailey et al., 2006) and lens fate appears to require prolonged BMP exposure from within the ectoderm itself, as well as later FGF and BMP from the optic vesicle (Faber et al., 2001; Faber et al., 2002; Furuta and Hogan, 1998; Sjodal et al., 2007; Wawersik et al., 1999).

Otx2 plays a crucial role in defining the anterior and intermediate (see below) PPR by repressing Gbx2 (Fig. 5; see above). In

UNCORRECTED PROOF

Please cite this article as: Grocott, T., et al., The peripheral sensory nervous system in the vertebrate head: A gene regulatory perspective. Dev. Biol. (2012), http://dx.doi.org/10.1016/j.ydbio.2012.06.028

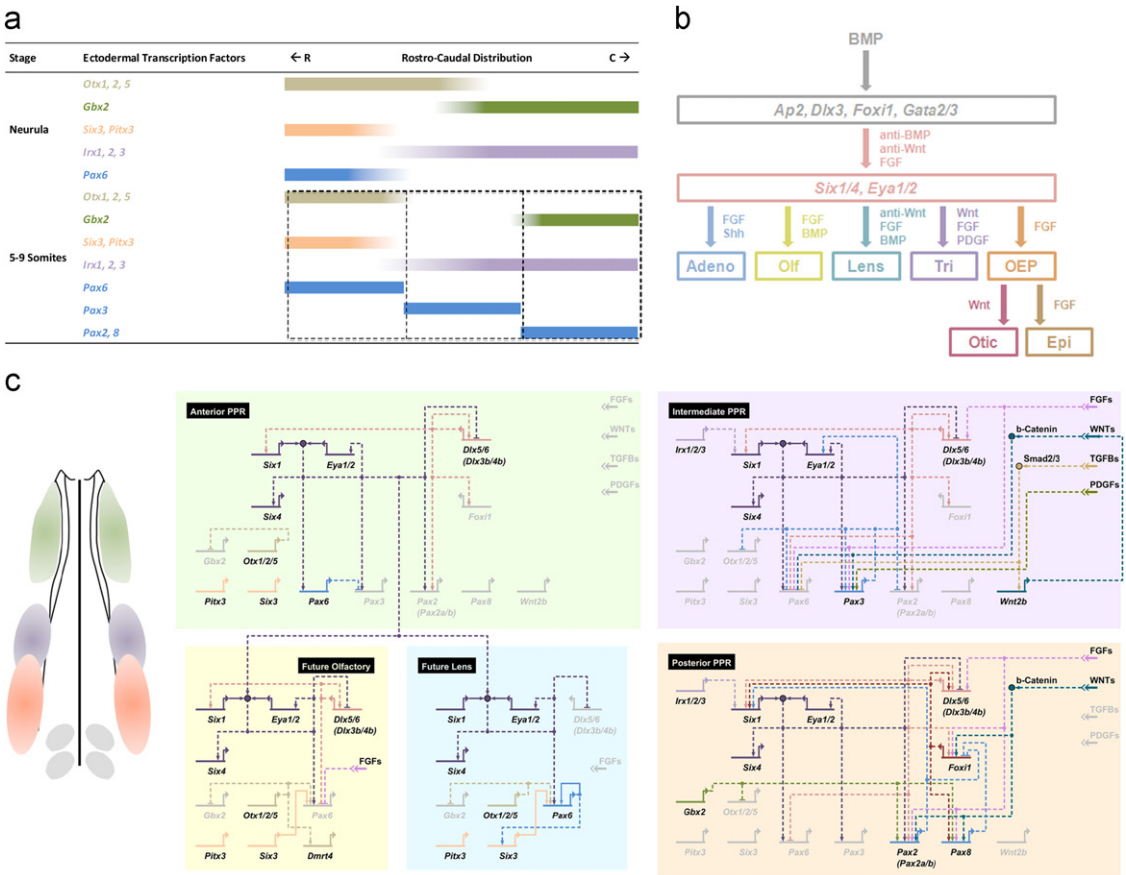

Fig. 5. Anterior–posterior patterning of the PPR. (A) Diagram showing differential gene expression along the rostro-caudal axis at neurula and 5-9 somite stages. See the main text for detailed description and references. Hatched boxes indicate the regulatory states described in the networks in (C). Note: the precise boundaries of Pax gene expression have not been mapped. (B) Summary of signalling pathways implicated in the induction of distinct placodes from the PPR. Adeno: adenohypophysis; Olf: olfactory; Tri: ophthalmic trigeminal; OEP: otic-epibranchial territory; Epi: epibranchial. (C) Gene regulatory networks defining the anterior PPR (green) and its subdivision into olfactory (yellow) and lens (blue) precursors, the intermediate (opV; purple) and posterior (light orange) PPR. Left: diagram of a 5-somite stage chick embryo with colour-coded regions for the regulatory states shown in the networks.

addition, in *Xenopus* activation of Otx2 target genes is required for the early specification of olfactory, lens and trigeminal precursors: misexpression of a constitutive repressor form of Otx2 prevents the expression of molecular markers characteristic for each placode (Steventon et al., 2012).

The paired box transcription factor *Pax6* is the earliest Pax gene expressed in the PPR (Bailey et al., 2006; Li et al., 1994; Zygar et al., 1998). In its absence the lens and olfactory placodes fail to thicken and their development is severely impaired (Ashery-Padan et al., 2000; Collinson et al., 2000; Grindley et al., 1997; Quinn et al., 1996). The signals that induce *Pax6* in the anterior PPR are currently unknown, and despite extensive cis-regulatory studies no pre-placodal enhancer has been identified within the Pax6 locus. It is clear however that Six1 plays a critical role in either *Pax6* initiation or in its maintenance: misexpression of a constitutive repressor form of Six1 prevents anterior *Pax6* expression (Christophorou et al., 2009) (Fig. 5). Whether Pax6 is a direct target of Six1 or is regulated by an intermediary protein remains to be elucidated.

During the segregation of lens and olfactory progenitors, Dlx5 and Pax6 may play antagonistic roles. Although initially co-expressed at pre-placodal stages, *Pax6* and *Dlx5* expression separates into two mutually exclusive domains, the future lens and olfactory placodes, respectively (Bhattacharyya et al., 2004). FGF8 from the anterior neural ridge suppresses Pax6 transiently in the olfactory region, while promoting *Dlx5* expression (Bailey et al., 2006). Conversely, misexpression of exogenous Dlx5 in the lens territory leads to loss of *Pax6* (Bhattacharyya et al., 2004). Thus, Dlx5 overexpression actively suppresses *Pax6* and may lead to transient downregulation of Pax6 in the olfactory placode.

Within the early lens placode Pax6 activates its own transcription as well as other targets, however this autoregulation does not appear to be essential at pre-placodal stages in the mouse (Ashery-Padan et al., 2000). As the lens placode forms Pax6 is directly activated by the Six family member Six3, which interacts with the Pax6 lens placode enhancer (Pax6-EE; Liu et al., 2006). As Six3 and Pax6 are already coexpressed at pre-placodal stages it is tempting to speculate that Six3 has also an earlier role in Pax6 regulation.

Equally important is the question of how *Pax6* is restricted to the anterior PPR (Fig. 5). While it is normally absent from the epibranchial and otic territory (Li et al., 1994), explant studies in chick demonstrated that the entire PPR has an intrinsic 'bias' towards *Pax6* expression: culturing the posterior PPR ex vivo leads to a rapid upregulation of *Pax6* and ultimately results in lens formation (Bailey et al., 2006). This observation suggests that in vivo signals extrinsic to the PPR actively suppress *Pax6* to prevent ectopic lens formation. Two strong candidates for this role are Wnt and FGF signalling. Within the neural plate and its border Wnt signalling establishes posterior identity (Carmona-Fontaine et al., 2007; Heisenberg et al., 2001; Kim et al., 2000; Li et al., 2009; Patthey et al., 2008; van de Water et al., 2001;

Villanueva et al., 2002; for review: Houart et al., 2002) although a direct role (rather than indirect through patterning of the neural tube) in the early subdivision of the placode territory has not yet been established. However, in support of Wnt involvement the Wnt target genes *Gbx2* and *Irx1*-3 (Braun et al., 2003; Gomez-Skarmeta et al., 2001; Itoh et al., 2002; Kiecker and Niehrs, 2001; Li et al., 2009; Rhinn et al., 2009) are expressed in the posterior PPR, with *Gbx2* abutting *Otx2* and *Irx1-3* complementary to *Six3* expression. Like in the neural plate, these Wnt responsive factors pattern the PPR through repression of their anterior counterparts as we have recently shown for Otx2 and Gbx2 (Steventon et al., 2012). In addition, *Pax3* starts to be expressed in the ophthalmic trigeminal placode as *Pax6* is lost from this domain and represses *Pax6* transcription and vice versa (Wakamatsu, 2011). Like *Gbx2* and *Irx1-3*, *Pax3* is activated by canonical Wnt signalling (Canning et al., 2008; Lassiter et al., 2007) and all three factors may participate in the *Pax6* restriction. At later stages, the Wnt pathway continues to downregulate *Pax6* and confines it to the prospective lens placode (Grocott et al., 2011; Smith et al., 2005). Thus, canonical Wnt signalling may be an important negative regulator of *Pax6*, first to confine its expression to the anterior PPR and later to the lens territory (Fig. 5). In turn, Wnt antagonists from the hypoblast (anterior visceral endoderm in mouse; for review: Stern and Downs, 2012) and the mesendoderm underlying the anterior PPR protect this territory, thus allowing the expression of *Pax6* and other anterior PPR genes.

While also implicated in anterior–posterior patterning of the neural tube, within the placode territory FGF signalling appears to control a different process: the suppression of *Pax6* and simultaneous induction of individual placodes. FGFs mediate the induction of multiple placodes including the olfactory, trigeminal, epibranchial and otic (see below; Bailey et al., 2006; Canning et al., 2008; Freter et al., 2008; Ladher et al., 2000; Maroon et al., 2002; Martin and Groves, 2006; Nechiporuk et al., 2007; Nechiporuk et al., 2005; Nikaido et al., 2007; Phillips et al., 2001; Sun et al., 2007; Wright and Mansour, 2003) (Fig. 5). They actively promote the expression of placode-specific genes and simultaneously suppress *Pax6*. In the presence of FGF8, posterior PPR explants fail to initiate *Pax6* expression, suggesting that FGF activity normally prevents inappropriate *Pax6* expression. In summary, Wnt and FGF pathways may cooperate to restrict Pax6 to the anterior-most PPR. While Wnt continues to inhibit *Pax6* at lens placode stages (Grocott et al., 2011; Smith et al., 2005), FGF from the optic vesicle later promotes its expression and lens character (Faber et al., 2001; Vogel-Hopker et al., 2000).

The posterior PPR: otic and epibranchial precursors

Prior to the Six/Eya network *Gbx2* is already expressed in the posterior ectoderm and subsequently localises to the posterior placode territory abutting *Otx2* anteriorly (Acampora et al., 1995; Bally-Cuif et al., 1995; Braun et al., 2003; Broccoli et al., 1999; Gammill and Sive, 2000; Glavic et al., 2002; Li et al., 2009; Millet et al., 1999). Shortly thereafter, at neurula stages members of the Irx family become confined to the posterior PPR, with their anterior limit rostral to *Gbx2* (Bellefroid et al., 1998; Glavic et al., 2002; Gomez-Skarmeta et al., 1998; Goriely et al., 1999) (Fig. 5). Members of two gene families, Dlx (Dlx3b/4b in fish, Dlx5/6 in chick) and Foxi genes (Foxi1 in fish, Foxi3 in chick and mouse), are initially expressed in the non-neural ectoderm and throughout the PPR, but now become rapidly confined posteriorly (Brown et al., 2005; Nissen et al., 2003; Ohyama and Groves, 2004; Solomon and Fritz, 2002; Solomon et al., 2003a, 2003b). These transcription factors form a network of interactions regulating both each other and the onset of *Pax2*, *Pax8* and *Sox3* (Hans et al., 2004; Kwon et al., 2010; Nissen et al., 2003; Padanad and Riley, 2011; Solomon et al., 2003a). Together, the latter factors label a posterior equivalence group of cells (posterior placode area or PPA), all of which can generate otic, epibranchial and lateral line placodes (for review: Ladher et al., 2010; Schlosser, 2010). Like in the anterior PPR spatially and temporally controlled signalling events segregate these different fates over time.

Gbx2 is among the earliest factors to promote posterior PPR identity and appears to play a dual role (Steventon et al., 2012; Fig. 5): it represses *Otx2* early and provides positive input for *Pax8* and *Pax2* later. In *Xenopus*, Gbx2 knock-down leads to *Otx2* expansion, while misexpression of Gbx2 and of a constitutive repressor results in *Otx2* loss suggesting that Gbx2 acts as transcriptional repressor (Steventon et al., 2012). However, Gbx2 switches to an activator during otic specification: Gbx2 constitutive repressor and Gbx2 knock-down lead to a loss of otic *Pax8* and *Pax2*. Gbx2 alone cannot induce *Pax2/8* suggesting that other cofactors are required. These findings highlight that transcription factor action is highly dependent on the cellular context and available cofactors.

Studies in mouse, zebrafish and chick show that Pax2 and Pax8 function is critical for normal ear development (Bouchard et al., 2010; Burton et al., 2004; Christophorou et al., 2010; Mackereth et al., 2005; Torres et al., 1996) and for the formation of some epibranchial neurons (Nechiporuk et al., 2007). Pax2 knockout mice show severe malformations of the cochlea and the endolymphatic duct as well as absence of the saccule (Burton et al., 2004; Torres et al., 1996). While Pax8 mutant mice do not show an ear phenotype, Pax2/Pax8 double mutants arrest ear development at the vesicle stage highlighting their important role at early stages (Bouchard et al., 2010). Likewise, in humans PAX2 mutations are associated with sensorineuronal deafness (Favor et al., 1996; Sanyanusin et al., 1995; Schimmenti et al., 1997). The fact that birds appear to have lost Pax8 due to chromosomal rearrangements allows the investigation of Pax2 function directly: in chick Pax2 knock-down impairs early otic specification as evidenced by the loss of early otic markers (Christophorou et al., 2010). In zebrafish, both Pax2 and Pax8 cooperate during otic vesicle development: in the absence of Pax8, Pax2a and Pax2b a small otic placode is induced, but degenerates completely over time (Mackereth et al., 2005). Together, these findings suggest that Pax2 and 8 play an important role in specification of otic cells from the PPR, as well as during later ear development.

Although initially thought to be otic inducers, more recent evidence implicates members of the FGF family as key signals to induce the PPA (Fig. 5). FGFs from the head mesoderm and the hindbrain are required and sufficient to induce the otic placode in fish, chick and mouse (for review: Barald and Kelley, 2004; Ladher et al., 2000; Ladher et al., 2010; Leger and Brand, 2002; Liu et al., 2003; Maroon et al., 2002; Ohyama et al., 2007; Phillips et al., 2001; Phillips et al., 2004; Riley and Phillips, 2003; Schimmang, 2007; Wright and Mansour, 2003), but have more recently also been implicated in epibranchial placode induction (Freter et al., 2008; Nechiporuk et al., 2007; Nikaido et al., 2007; Sun et al., 2007). The precise nature of the FGF ligands involved differs between species, with FGF3 and -8 being required in zebrafish, FGF3 and -10 in mouse and FGF3 and -19 in chick. Prolonged exposure of PPA cells to FGFs promotes epibranchial fates, while repressing otic character (Freter et al., 2008; Nechiporuk et al., 2007). Instead, cells close to the neural tube are exposed to hindbrain-derived canonical Wnt signalling and adopt otic fate, while epibranchial fate is suppressed (Freter et al., 2008; Ladher et al., 2000; Ohyama et al., 2006). Thus, a model emerges in which FGFs initially induce a posterior placode equivalence group, from which otic and epibranchial identity is established depending on length of FGF exposure and on the presence or absence of Wnt

UNCORRECTED PROOF

Please cite this article as: Grocott, T., et al., The peripheral sensory nervous system in the vertebrate head: A gene regulatory perspective. Dev. Biol. (2012), http://dx.doi.org/10.1016/j.ydbio.2012.06.028

(Fig. 5). While this model holds true in amniotes and Wnt activity also promotes otic identity in *Xenopus* (Park and Saint-Jeannet, 2008), the role of Wnt signalling in zebrafish otic induction is still under debate (Phillips et al., 2004). Induction of lateral line placodes has so far remained elusive.

While at gastrula stages *Foxi1* and *Dlx3b/4b* are under the control of BMP signalling (see above), they are controlled by FGFs in the PPA (Hans et al., 2007; Hans et al., 2004; Nissen et al., 2003), where they promote each other's expression in a positive feedback loop: exogenous FoxI1 induces Dlx3b and vice versa, while Dlx3b, like Dlx5 in chick (McLarren et al., 2003), also regulates its own expression (Aghaallaei et al., 2007; Solomon and Fritz, 2002). In zebrafish *Dlx3b* expression depends on Foxi1 function (Solomon et al., 2003a), while in *Xenopus* Foxi1 depends on Dlx3 activity (Pieper et al., 2012). Thus, Foxi1 and Dlx3b/4b regulate each other in the PPA, where they synergise to promote Pax gene expression and consequently posterior placode specification. Downstream of Foxi1 cells activate *Pax8* and *Sox3*; accordingly zebrafish Foxi1 mutants lose the earliest PPA gene *Pax8* as well as the slightly later expressed *Pax2* (Hans et al., 2007; Nissen et al., 2003; Solomon et al., 2003a). In contrast, Dlx3b/4b controls *Pax2*, but not *Pax8* (Hans et al., 2007; Hans et al., 2004; Mackereth et al., 2005; Padanad and Riley, 2011; Solomon and Fritz, 2002; Solomon et al., 2004; Sun et al., 2007): in the absence of Dlx3b/4b function *Pax8* expression remains normal while *Pax2* is lost. Thus, FGF regulates the two Pax genes that demarcate the PPA using two independent pathways. Once activated, Pax2 and Pax8 cooperate to suppress *Foxi1* as a prerequisite for otic specification and to promote otic fate synergistically (Mackereth et al., 2005; Padanad and Riley, 2011) (Fig. 5).

Like Pax6 anteriorly, *Pax2* expression in the PPA requires the activation of Six1 target genes: its expression is lost after misexpression of a constitutive repressor form of Six1 or after Six1 knockdown (Bricaud and Collazo, 2006; Christophorou et al., 2009). However, thereafter Pax2 controls Six via a recently identified otic specific enhancer (Sato et al., 2012), suggesting that a positive feedback loop between Six1 and Pax2 locks cells in an otic state. In contrast, other Pax proteins negatively regulate *Pax2*: exogenous Pax3 suppresses *Pax2* expression in chick otic placode (Dude et al., 2009). Thus, mutual repression between Pax genes patterns the placode territory to define subgroups of cells with distinct developmental potential (Fig. 5).

The intermediate PPR: trigeminal precursors

Pax3 is the earliest marker of the prospective ophthalmic trigeminal (opV; profundal in anamniotes) placode, where its expression is initiated at the 8 somite stage in chick and slightly earlier in *Xenopus* (Dude et al., 2009; Pieper et al., 2011; Schlosser and Ahrens, 2004; Stark et al., 1997; for review: Schlosser, 2006). Before the onset of *Pax3* expression in chick, at least some opV precursors are *Pax6* positive (compare anterior position of opV-fated cells; Xu et al., 2008) and *Pax6* expression (Bailey et al., 2006; Bhattacharyya et al., 2004), while some maxillomandibular trigeminal (mmV; trigeminal in anamniotes) precursors arise from the Pax2$^+$ territory (Xu, 2008). Most of the mmV however, does not seem to express any Pax gene. In contrast in Xenopus, mmV/trigeminal precursors initially express *Pax6* reflecting their location anterior to the profundal placode at early stages (Pieper et al., 2011). Thus, due to the lack of molecular markers for the mmV/trigeminal placode little is known about its specification and the molecular interactions involved.

In the opV territory, the onset of *Pax3* coincides with the disappearance of *Pax6* in agreement with the mutual repression between these factors (Wakamatsu, 2011). Like the other Pax genes in the placode territory, *Pax3* transcription requires the activation of Six1 target genes since misexpression of a constitutive repressor form of Six1 prevents its expression (Christophorou et al., 2009). Additionally, Pax3 controls its own expression and positively feeds back onto *Eya2* (Dude et al., 2009): misexpression of exogenous Pax3-Engrailed fusion protein (which suppresses Pax3 targets) leads to the loss of endogenous *Pax3* and *Eya2*. Finally, misexpression of Pax3 in the posterior PPR represses the otic/epibranchial marker *Pax2* (Dude et al., 2009) suggesting that indeed cross-repressive interactions between different Pax genes are critically involved in rostro-caudal patterning of the placode territory.

Neighbouring tissues control *Pax3* induction in the opV and in particular the neural tube has been implicated (Canning et al., 2008; Stark et al., 1997), although signals from migrating neural crest cells cannot be excluded. Again, neural tube-derived canonical Wnt signalling is thought to play a role in *Pax3* induction and Wnt activity is required for its maintenance. Wnts appear to cooperate with the FGF pathway (Canning et al., 2008; Lassiter et al., 2007; Shigetani et al., 2008) and PDGF signalling has also been implicated, but is not sufficient to induce Pax3 in competent ectoderm (McCabe and Bronner-Fraser, 2008). Additionally in chick, *Pax3* induction next to the dorsal neural tube and its subsequent lateral expansion correlates with the onset of neural crest cell migration making them a potential source of opV inducing signals. Indeed, neural crest derived TGF-β signalling activates *Wnt2b* expression in the overlying ectoderm including in the *Pax3* domain (Grocott et al., 2011). Although TGF-β alone cannot induce *Pax3* in competent anterior PPR explants it is possible that a combination of TGF-β/Wnt2b and FGF/PDGF is required. Thus, multiple pathways appear to converge to induce trigeminal identity via Pax3 activation (Fig. 5). However, without the identification of Pax3 enhancer regions it remains unclear whether they directly control its expression or act via intermediate targets. In the future we will need to understand how these signals are integrated intracellular.

In summary, subdivision of the placode territory occurs sequentially with the establishment of multiplacodal domains. Within these domains cells have equivalent developmental potential and can give rise to any placode if exposed to appropriate signals. Following the expression of the Six and Eya network, Pax genes mediate this initial subdivision into anterior, intermediate and posterior placodal areas by mutual repression. While Six and Eya target activation is required for all Pax genes, irrespective of their rostro-caudal location, other factors must cooperate to impart regional identity and to induce Pax genes in specific locations. Good candidates for this role are regionally restricted factors like Otx2, Gbx2, Irx1-3 and Six3 in analogy to their role in the neural tube.

Conclusion

In the last decade or so, many of the transcription factors and signals that influence sensory placode development have been identified. The GRN presented here reveals their temporal hierarchy and how both signals and transcription factors are repeatedly used first to specify the PPR and then to subdivide it into placode cells with unique identity. Over time the developmental potential of ectodermal cells becomes progressively restricted and cross-repressive interactions and positive feedback loops are critically important to segregate and stabilise different fates, respectively. In particular, the repeated use of FGF – first as a 'border' inducing signal, then as PPR inducer and finally as inducer for most placodes – demonstrates how the regulatory state of each cell population and its developmental history

UNCORRECTED PROOF

Please cite this article as: Grocott, T., et al., The peripheral sensory nervous system in the vertebrate head: A gene regulatory perspective. Dev. Biol. (2012), http://dx.doi.org/10.1016/j.ydbio.2012.06.028

determines the ultimate outcome. The next challenge will be to determine direct FGF targets and how the same signal is interpreted at each stage.

While the GRN presented here allows us to predict new interactions and loss- and gain-of-function phenotypes, it clearly demonstrates our lack of knowledge with respect to the cis-regulatory mechanisms involved. With the notable exception of Six1 and a few otic genes (Barembaum and Bronner-Fraser, 2010; Betancur et al., 2010b; Saigou et al., 2010; Sato et al., 2010), none of the regulatory elements that control spatial and temporal gene expression in sensory progenitors have been identified. These will be crucial to understand how signalling and transcription factor inputs are integrated to control cell fate decisions. Finally, it is surprising that Six and Eya co-factors (except for the expression of putative co-factors; Neilson et al., 2010) and downstream targets have not been reported in vertebrates. Their identification will be important to understand not only how these factors control the development of diverse placodes, but also how mutations in the Six/Eya pathway in humans leads to congenital abnormalities in sense and other organs.

Acknowledgements

This work was funded by BBSRC and NIH project grants to AS and a Deafness Research UK studentship. TG is supported by an Early Career Investigator Award from Fight For Sight.

Appendix A. Supporting information

Supplementary data associated with this article can be found in the online version at http://dx.doi.org/10.1016/j.ydbio.2012.06.028.

References

Abdelhak, S., Kalatzis, V., Heilig, R., Compain, S., Samson, D., Vincent, C., Weil, D., Cruaud, C., Sahly, I., Leibovici, M., Bitner-Glindzicz, M., Francis, M., Lacombe, D., Vigneron, J., Charachon, R., Boven, K., Bedbeder, P., Van Regemorter, N., Weissenbach, J., Petit, C., 1997. A human homologue of the Drosophila eyes absent gene underlies branchio- oto-renal (BOR) syndrome and identifies a novel gene family. Nat. Genet. 15, 157–164.

Acampora, D., Gulisano, M., Broccoli, V., Simeone, A., 2001. Otx genes in brain morphogenesis. Prog. Neurobiol. 64, 69–95.

Acampora, D., Mazan, S., Lallemand, Y., Avantaggiato, V., Maury, M., Simeone, A., Brulet, P., 1995. Forebrain and midbrain regions are deleted in Otx2-/- mutants due to a defective anterior neuroectoderm specification during gastrulation. Development 121, 3279–3290.

Aghaallaei, N., Bajoghli, B., Czerny, T., 2007. Distinct roles of Fgf8, Foxi1, Dlx3b and Pax8/2 during otic vesicle induction and maintenance in medaka. Dev. Biol. 307, 408–420.

Ahrens, K., Schlosser, G., 2005. Tissues and signals involved in the induction of placodal Six1 expression in *Xenopus laevis*. Dev. Biol. 288, 40–59.

Albazerchi, A., Stern, C.D., 2007. A role for the hypoblast (AVE) in the initiation of neural induction, independent of its ability to position the primitive streak. Dev. Biol. 301, 489–503.

Alvarez, Y., Alonso, M.T., Vendrell, V., Zelarayan, L.C., Chamero, P., Theil, T., Bosl, M.R., Kato, S., Maconochie, M., Riethmacher, D., Schimmang, T., 2003. Requirements for FGF3 and FGF10 during inner ear formation. Development 130, 6329–6338.

Anderson, A.M., Weasner, B.M., Weasner, B.P., Kumar, J.P., 2012. Dual transcriptional activities of SIX proteins define their roles in normal and ectopic eye development. Development 139, 991–1000.

Ashery-Padan, R., Marquardt, T., Zhou, X., Gruss, P., 2000. Pax6 activity in the lens primordium is required for lens formation and for correct placement of a single retina in the eye. Genes Dev. 14, 2701–2711.

Azuma, N., Hirakiyama, A., Inoue, T., Asaka, A., Yamada, M., 2000. Mutations of a human homologue of the Drosophila eyes absent gene (EYA1) detected in patients with congenital cataracts and ocular anterior segment anomalies. Hum. Mol. Genet. 9, 363–366.

Bailey, A.P., Bhattacharyya, S., Bronner-Fraser, M., Streit, A., 2006. Lens specification is the ground state of all sensory placodes, from which FGF promotes olfactory identity. Dev. Cell 11, 505–517.

Baker, C.V., Stark, M.R., Marcelle, C., Bronner-Fraser, M., 1999. Competence, specification and induction of Pax-3 in the trigeminal placode. Development 126, 147–156.

Baker, C.V.H., Bronner-Fraser, M., 2001. Vertebrate cranial placodes. Part I. Embryonic induction. Dev. Biol. 232, 1–61.

Bally-Cuif, L., Gulisano, M., Broccoli, V., Boncinelli, E., 1995. c-otx2 is expressed in two different phases of gastrulation and is sensitive to retinoic acid treatment in chick embryo. Mech. Dev. 49, 49–63.

Bang, A.G., Papalopulu, N., Kintner, C., Goulding, M.D., 1997. Expression of Pax-3 is initiated in the early neural plate by posteriorizing signals produced by the organizer and by posterior non-axial mesoderm. Development 124, 2075–2085.

Barald, K.F., Kelley, M.W., 2004. From placode to polarization: new tunes in inner ear development. Development 131, 4119–4130.

Barembaum, M., Bronner-Fraser, M., 2007. Spalt4 mediates invagination and otic placode gene expression in cranial ectoderm. Development 134, 3805–3814.

Barembaum, M., Bronner-Fraser, M., 2010. Pax2 and Pea3 synergize to activate a novel regulatory enhancer for spalt4 in the developing ear. Dev. Biol. 340, 222–231.

Basch, M.L., Bronner-Fraser, M., Garcia-Castro, M.I., 2006. Specification of the neural crest occurs during gastrulation and requires Pax7. Nature 441, 218–222.

Basch, M.L., Selleck, M.A., Bronner-Fraser, M., 2000. Timing and competence of neural crest formation. Dev. Neurosci. 22, 217–227.

Beanan, M.J., Feledy, J.A., Sargent, T.D., 2000. Regulation of early expression of Dlx3, a Xenopus anti-neural factor, by beta-catenin signaling. Mech. Dev. 91, 227–235.

Beanan, M.J., Sargent, T.D., 2000. Regulation and function of Dlx3 in vertebrate development. Dev. Dyn. 218, 545–553.

Bellefroid, E.J., Kobbe, A., Gruss, P., Pieler, T., Gurdon, J.B., Papalopulu, N., 1998. Xiro3 encodes a Xenopus homolog of the Drosophila Iroquois genes and functions in neural specification. Embo. J. 17, 191–203.

Bellmeyer, A., Krase, J., Lindgren, J., LaBonne, C., 2003. The protooncogene c-myc is an essential regulator of neural crest formation in xenopus. Dev. Cell 4, 827–839.

Bessarab, D.A., Chong, S.W., Korzh, V., 2004. Expression of zebrafish six1 during sensory organ development and myogenesis. Dev. Dyn. 230, 781–786.

Betancur, P., Bronner-Fraser, M., Sauka-Spengler, T., 2010a. Assembling neural crest regulatory circuits into a gene regulatory network. Annu. Rev. Cell Dev. Biol. 26, 581–603.

Betancur, P., Bronner-Fraser, M., Sauka-Spengler, T., 2010b. Genomic code for Sox10 activation reveals a key regulatory enhancer for cranial neural crest. Proc. Natl. Acad. Sci. USA 107, 3570–3575.

Bhat, N., Riley, B.B., 2011. Integrin-alpha5 coordinates assembly of posterior cranial placodes in zebrafish and enhances Fgf-dependent regulation of otic/epibranchial cells. PLoS ONE 6, e27778.

Bhattacharyya, S., Bailey, A.P., Bronner-Fraser, M., Streit, A., 2004. Segregation of lens and olfactory precursors from a common territory: cell sorting and reciprocity of Dlx5 and Pax6 expression. Dev. Biol. 271, 403–414.

Bhattacharyya, S., Bronner-Fraser, M., 2008. Competence, specification and commitment to an olfactory placode fate. Development 135, 4165–4177.

Bohm, J., Buck, A., Borozdin, W., Mannan, A.U., Matysiak-Scholze, U., Adham, I., Schulz-Schaeffer, W., Floss, T., Wurst, W., Kohlhase, J., Barrionuevo, F., 2008. Sall1, sall2, and sall4 are required for neural tube closure in mice. Am. J. Pathol. 173, 1455–1463.

Bonini, N.M., Bui, Q.T., Gray-Board, G.L., Warrick, J.M., 1997. The Drosophila eyes absent gene directs ectopic eye formation in a pathway conserved between flies and vertebrates. Development 124, 4819–4826.

Bonini, N.M., Leiserson, W.M., Benzer, S., 1993. The eyes absent gene: genetic control of cell survival and differentiation in the developing Drosophila eye. Cell 72, 379–395.

Bouchard, M., de Caprona, D., Busslinger, M., Xu, P., Fritzsch, B., 2010. Pax2 and Pax8 cooperate in mouse inner ear morphogenesis and innervation. BMC. Dev. Biol. 10, 89.

Braun, M.M., Etheridge, A., Bernard, A., Robertson, C.P., Roelink, H., 2003. Wnt signaling is required at distinct stages of development for the induction of the posterior forebrain. Development 130, 5579–5587.

Bricaud, O., Collazo, A., 2006. The transcription factor six1 inhibits neuronal and promotes hair cell fate in the developing zebrafish (Danio rerio) inner ear. J. Neurosci. 26, 10438–10451.

Broccoli, V., Boncinelli, E., Wurst, W., 1999. The caudal limit of Otx2 expression positions the isthmic organizer. Nature 401, 164–168.

Brown, S.T., Wang, J., Groves, A.K., 2005. Dlx gene expression during chick inner ear development. J. Comp. Neurol. 483, 48–65.

Brugmann, S.A., Pandur, P.D., Kenyon, K.L., Pignoni, F., Moody, S.A., 2004. Six1 promotes a placodal fate within the lateral neurogenic ectoderm by functioning as both a transcriptional activator and repressor. Development 131, 5871–5881.

Burton, Q., Cole, L.K., Mulheisen, M., Chang, W., Wu, D.K., 2004. The role of Pax2 in mouse inner ear development. Dev. Biol. 272, 161–175.

Canning, C.A., Lee, L., Luo, S.X., Graham, A., Jones, C.M., 2008. Neural tube derived Wnt signals cooperate with FGF signaling in the formation and differentiation of the trigeminal placodes. Neural Dev. 3, 35.

Carmona-Fontaine, C., Acuna, G., Ellwanger, K., Niehrs, C., Mayor, R., 2007. Neural crests are actively precluded from the anterior neural fold by a novel inhibitory mechanism dependent on Dickkopf1 secreted by the prechordal mesoderm. Dev. Biol. 309, 208–221.

UNCORRECTED PROOF

ARTICLE IN PRESS

Chapman, S.C., Brown, R., Lees, L., Schoenwolf, G.C., Lumsden, A., 2004. Expression analysis of chick Wnt and frizzled genes and selected inhibitors in early chick patterning. Dev. Dyn. 229, 668–676.

Chen, B., Kim, E.-H., Xu, P.-X., 2009. Initiation of olfactory placode development and neurogenesis is blocked in mice lacking both Six1 and Six4. Dev. Biol. 326, 75–85.

Chen, R., Amoui, M., Zhang, Z., Mardon, G., 1997. Dachshund and eyes absent proteins form a complex and function synergistically to induce ectopic eye development in Drosophila. Cell 91, 893–903.

Cheyette, B.N., Green, P.J., Martin, K., Garren, H., Hartenstein, V., Zipursky, S.L., 1994. The Drosophila sine oculis locus encodes a homeodomain-containing protein required for the development of the entire visual system. Neuron 12, 977–996.

Christophorou, N.A., Bailey, A.P., Hanson, S., Streit, A., 2009. Activation of Six1 target genes is required for sensory placode formation. Dev. Biol. 336, 327–336.

Christophorou, N.A., Mende, M., Lleras-Forero, L., Grocott, T., Streit, A., 2010. Pax2 coordinates epithelial morphogenesis and cell fate in the inner ear. Dev. Biol. 345, 180–190.

Collinson, J.M., Hill, R.E., West, J.D., 2000. Different roles for Pax6 in the optic vesicle and facial epithelium mediate early morphogenesis of the murine eye. Development 127, 945–956.

Cornesse, Y., Pieler, T., Hollemann, T., 2005. Olfactory and lens placode formation is controlled by the hedgehog-interacting protein (Xhip) in Xenopus. Dev. Biol. 277, 296–315.

Davidson, E.H., 2009. Network design principles from the sea urchin embryo. Curr. Opin. Genet. Dev. 19, 535–540.

Davis, R.J., Shen, W., Heanue, T.A., Mardon, G., 1999. Mouse Dach, a homologue of Drosophila dachshund, is expressed in the developing retina, brain and limbs. Dev Genes Evol. 209, 526–536.

Donner, A.L., Maas, R.L., 2004. Conservation and non-conservation of genetic pathways in eye specification. Int. J. Dev. Biol. 48, 743–753.

Dude, C.M., Kuan, C.Y., Bradshaw, J.R., Greene, N.D., Relaix, F., Stark, M.R., Baker, C.V., 2009. Activation of Pax3 target genes is necessary but not sufficient for neurogenesis in the ophthalmic trigeminal placode. Dev. Biol. 326, 314–326.

Dutta, S., Dietrich, J.E., Aspock, G., Burdine, R.D., Schier, A., Westerfield, M., Varga, Z.M., 2005. pitx3 defines an equivalence domain for lens and anterior pituitary placode. Development, 1579–1590.

Eivers, E., Demagny, H., De Robertis, E.M., 2009. Integration of BMP and Wnt signaling via vertebrate Smad1/5/8 and Drosophila Mad. Cytokine Growth Factor Rev. 20, 357–365.

Eivers, E., Fuentealba, L.C., De Robertis, E., 2008. Integrating positional information at the level of Smad1/5/8. Curr. Opin. Genet. Dev. 18, 304–310.

Elms, P., Scurry, A., Davies, J., Willoughby, C., Hacker, T., Bogani, D., Arkell, R., 2004. Overlapping and distinct expression domains of Zic2 and Zic3 during mouse gastrulation. Gene Expr. Patterns 4, 505–511.

Elms, P., Siggers, P., Napper, D., Greenfield, A., Arkell, R., 2003. Zic2 is required for neural crest formation and hindbrain patterning during mouse development. Dev. Biol. 264, 391–406.

Esterberg, R., Fritz, A., 2009. dlx3b/4b are required for the formation of the preplacodal region and otic placode through local modulation of BMP activity. Dev. Biol. 325, 189–199.

Esteve, P., Bovolenta, P., 1999. cSix4, a member of the six gene family of transcription factors, is expressed during placode and somite development. Mech. Dev. 85, 161–165.

Ezin, A.M., Fraser, S.E., Bronner-Fraser, M., 2009. Fate map and morphogenesis of presumptive neural crest and dorsal neural tube. Dev. Biol. 330, 221–236.

Faber, S.C., Dimanlig, P., Makarenkova, H.P., Shirke, S., Ko, K., Lang, R.A., 2001. Fgf receptor signaling plays a role in lens induction. Development 128, 4425–4438.

Faber, S.C., Robinson, M.L., Makarenkova, H.P., Lang, R.A., 2002. Bmp signaling is required for development of primary lens fiber cells. Development 129, 3727–3737.

Fainsod, A., Steinbeisser, H., De Robertis, E.M., 1994. On the function of BMP-4 in patterning the marginal zone of the Xenopus embryo. Embo. J. 13, 5015–5025.

Favor, J., Sandulache, R., Neuhauser-Klaus, A., Pretsch, W., Chatterjee, B., Senft, E., Wurst, W., Blanquet, V., Grimes, P., Sporle, R., Schughart, K., 1996. The mouse Pax2(1Neu) mutation is identical to a human PAX2 mutation in a family with renal-coloboma syndrome and results in developmental defects of the brain, ear, eye, and kidney. Proc. Natl. Acad. Sci. USA 93, 13870–13875.

Feledy, J.A., Beanan, M.J., Sandoval, J.J., Goodrich, J.S., Lim, J.H., Matsuo-Takasaki, M., Sato, S.M., Sargent, T.D., 1999a. Inhibitory patterning of the anterior neural plate in Xenopus by homeodomain factors Dlx3 and Msx1. Dev. Biol. 212, 455–464.

Feledy, J.A., Morasso, M.I., Jang, S.I., Sargent, T.D., 1999b. Transcriptional activation by the homeodomain protein distal-less 3. Nucleic Acids Res. 27, 764–770.

Fernandez-Garre, P., Rodriguez-Gallardo, L., Gallego-Diaz, V., Alvarez, I.S., Puelles, L., 2002. Fate map of the chicken neural plate at stage 4. Development 129, 2807–2822.

Freter, S., Muta, Y., Mak, S.S., Rinkwitz, S., Ladher, R.K., 2008. Progressive restriction of otic fate: the role of FGF and Wnt in resolving inner ear potential. Development 135, 3415–3424.

Friedman, R.A., Makmura, L., Biesiada, E., Wang, X., Keithley, E.M., 2005. Eya1 acts upstream of Tbx1, Neurogenin 1, NeuroD and the neurotrophins BDNF and NT-3 during inner ear development. Mech. Dev. 122, 625–634.

Fuentealba, L.C., Eivers, E., Ikeda, A., Hurtado, C., Kuroda, H., Pera, E.M., De Robertis, E.M., 2007. Integrating patterning signals: Wnt/GSK3 regulates the duration of the BMP/Smad1 signal. Cell 131, 980–993.

Furuta, Y., Hogan, B.L., 1998. BMP4 is essential for lens induction in the mouse embryo. Genes Dev. 12, 3764–3775.

Gallagher, B.C., Henry, J.J., Grainger, R.M., 1996. Inductive processes leading to inner ear formation during Xenopus development. Dev. Biol. 175, 95–107.

Gallera, J., Ivanov, I., 1964. La compétence neurogène du feuillet externe du blastoderme de Poulet en fonction du facteur 'temps'. J. Embryol. Exp. Morphol. 12, 693.

Gammill, L.S., Sive, H., 2000. Coincidence of otx2 and BMP4 signaling correlates with Xenopus cement gland formation. Mech. Dev. 92, 217–226.

Gamse, J.T., Sive, H., 2001. Early anteroposterior division of the presumptive neurectoderm in Xenopus. Mech. Dev. 104, 21–36.

Garcia-Castro, M.I., Marcelle, C., Bronner-Fraser, M., 2002. Ectodermal Wnt function as a neural crest inducer. Science 297, 848–851.

Garcia-Martinez, V., Alvarez, I.S., Schoenwolf, G.C., 1993. Locations of the ectodermal and nonectodermal subdivisions of the epiblast at stages 3 and 4 of avian gastrulation and neurulation. J. Exp. Zool. 267, 431–446.

Glavic, A., Gomez-Skarmeta, J.L., Mayor, R., 2002. The homeoprotein Xiro1 is required for midbrain–hindbrain boundary formation. Development 129, 1609–1621.

Glavic, A., Maris Honore, S., Gloria Feijoo, C., Bastidas, F., Allende, M.L., Mayor, R., 2004. Role of BMP signaling and the homeoprotein Iroquois in the specification of the cranial placodal field. Dev. Biol. 272, 89–103.

Gomez-Skarmeta, J., de La Calle-Mustienes, E., Modolell, J., 2001. The Wnt-activated Xiro1 gene encodes a repressor that is essential for neural development and downregulates Bmp4. Development 128, 551–560.

Gomez-Skarmeta, J.L., Glavic, A., de la Calle-Mustienes, E., Modolell, J., Mayor, R., 1998. Xiro, a Xenopus homolog of the Drosophila Iroquois complex genes, controls development at the neural plate. Embo. J. 17, 181–190.

Goriely, A., Diez del Corral, R., Storey, K.G., 1999. c-Irx2 expression reveals an early subdivision of the neural plate in the chick embryo. Mech. Dev. 87, 203–206.

Grindley, J.C., Hargett, L.K., Hill, R.E., Ross, A., Hogan, B.L., 1997. Disruption of PAX6 function in mice homozygous for the Pax6Sey-1Neu mutation produces abnormalities in the early development and regionalization of the diencephalon. Mech. Dev. 64, 111–126.

Grocott, T., Johnson, S., Bailey, A.P., Streit, A., 2011. Neural crest cells organize the eye via TGF-beta and canonical Wnt signalling. Nat. Commun. 2, 265.

Groves, A.K., Bronner-Fraser, M., 2000. Competence, specification and commitment in otic placode induction. Development 127, 3489–3499.

Hammond, K.L., Hanson, I.M., Brown, A.G., Lettice, L.A., Hill, R.E., 1998. Mammalian and Drosophila dachshund genes are related to the Ski proto-oncogene and are expressed in eye and limb. Mech. Dev. 74, 121–131.

Hans, S., Christison, J., Liu, D., Westerfield, M., 2007. Fgf-dependent otic induction requires competence provided by Foxi1 and Dlx3b. BMC Dev. Biol. 7, 5.

Hans, S., Liu, D., Westerfield, M., 2004. Pax8 and Pax2a function synergistically in otic specification, downstream of the Foxi1 and Dlx3b transcription factors. Development 131, 5091–5102.

Hanson, I.M., 2001. Mammalian homologues of the Drosophila eye specification genes. Semin. Cell Dev. Biol. 12, 475–484.

Hatada, Y., Stern, C.D., 1994. A fate map of the epiblast of the early chick embryo. Development 120, 2879–2889.

Heisenberg, C.P., Houart, C., Take-Uchi, M., Rauch, G.J., Young, N., Coutinho, P., Masai, I., Caneparo, L., Concha, M.L., Geisler, R., Dale, T.C., Wilson, S.W., Stemple, D.L., 2001. A mutation in the Gsk3-binding domain of zebrafish Masterblind/Axin1 leads to a fate transformation of telencephalon and eyes to diencephalon. Genes Dev. 15, 1427–1434.

Henry, J.J., Grainger, R.M., 1990. Early tissue interactions leading to embryonic lens formation in Xenopus laevis. Dev. Biol. 141, 149–163.

Herzog, W., Sonntag, C., von der Hardt, S., Roehl, H.H., Varga, Z.M., Hammerschmidt, M., 2004. Fgf3 signaling from the ventral diencephalon is required for early specification and subsequent survival of the zebrafish adenohypophysis. Development 131, 3681–3692.

Hidalgo-Sanchez, M., Millet, S., Bloch-Gallego, E., Alvarado-Mallart, R.M., 2005. Specification of the meso-isthmo-cerebellar region: the Otx2/Gbx2 boundary. Brain Res. Brain Res. Rev. 49, 134–149.

Hoffman, T.L., Javier, Anna L., Campeau, Shelley A., Knight, Robert D., Schilling, Thomas F., 2007. Tfap2 transcription factors in zebrafish neural crest development and ectodermal evolution. J. Exp. Zool. Part B: Mol. Dev. Evol. 308B, 679–691.

Hong, C.S., Saint-Jeannet, J.P., 2007. The activity of Pax3 and Zic1 regulates three distinct cell fates at the neural plate border. Mol. Biol. Cell 18, 2192–2202.

Houart, C., Caneparo, L., Heisenberg, C., Barth, K., Take-Uchi, M., Wilson, S., 2002. Establishment of the telencephalon during gastrulation by local antagonism of Wnt signaling. Neuron 35, 255–265.

Inoue, T., Ota, M., Mikoshiba, K., Aruga, J., 2007. Zic2 and Zic3 synergistically control neurulation and segmentation of paraxial mesoderm in mouse embryo. Dev. Biol. 306, 669–684.

Ishihara, T., Sato, S., Ikeda, K., Yajima, H., Kawakami, K., 2008. Multiple evolutionarily conserved enhancers control expression of Eya1. Dev. Dyn. 237, 3142–3156.

Itoh, M., Kudoh, T., Dedekian, M., Kim, C.H., Chitnis, A.B., 2002. A role for iro1 and iro7 in the establishment of an anteroposterior compartment of the ectoderm adjacent to the midbrain–hindbrain boundary. Development 129, 2317–2327.

UNCORRECTED PROOF

Please cite this article as: Grocott, T., et al., The peripheral sensory nervous system in the vertebrate head: A gene regulatory perspective. Dev. Biol. (2012), http://dx.doi.org/10.1016/j.ydbio.2012.06.028

Jacobson, A.G., 1963a. The determination and positioning of the nose, lens, and ear. I. Interactions within the ectoderm, and between the ectoderm and underlying tissues. J. Exp. Zool. 154, 273–283.
Jacobson, A.G., 1963b. The determination and positioning of the nose, lens, and ear. II. The role of the endoderm. J. Exp. Zool. 154, 285–291.
Jacobson, A.G., 1963c. The determination and positioning of the nose, lens, and ear. III. Effects of reversing the antero-posterior axis of epidermis, neural plate and neural fold. J. Exp. Zool. 154, 293–303.
Jemc, J., Rebay, I., 2007. The eyes absent family of phosphotyrosine phosphatases: properties and roles in developmental regulation of transcription. Annu. Rev. Biochem. 76, 513–538.
Johnson, K.R., Cook, S.A., Erway, L.C., Matthews, A.N., Sanford, L.P., Paradies, N.E., Friedman, R.A., 1999. Inner ear and kidney anomalies caused by IAP insertion in an intron of the Eya1 gene in a mouse model of BOR syndrome. Hum. Mol. Genet. 8, 645–653.
Joyner, A.L., Liu, A., Millet, S., 2000. Otx2, Gbx2 and Fgf8 interact to position and maintain a mid–hindbrain organizer. Curr. Opin. Cell Biol. 12, 736–741.
Kaji, T., Artinger, K.B., 2004. dlx3b and dlx4b function in the development of Rohon-Beard sensory neurons and trigeminal placode in the zebrafish neurula. Dev. Biol. 276, 523–540.
Kamachi, Y., Sockanathan, S., Liu, Q., Breitman, M., Lovell-Badge, R., Kondoh, H., 1995. Involvement of SOX proteins in lens-specific activation of crystallin genes. Embo. J. 14, 3510–3519.
Kamachi, Y., Uchikawa, M., Tanouchi, A., Sekido, R., Kondoh, H., 2001. Pax6 and SOX2 form a co-DNA-binding partner complex that regulates initiation of lens development. Genes Dev. 15, 1272–1286.
Karlstrom, R.O., Talbot, W.S., Schier, A.F., 1999. Comparative synteny cloning of zebrafish you-too: mutations in the Hedgehog target gli2 affect ventral forebrain patterning. Genes Dev. 13, 388–393.
Katahira, T., Sato, T., Sugiyama, S., Okafuji, T., Araki, I., Funahashi, J., Nakamura, H., 2000. Interaction between Otx2 and Gbx2 defines the organizing center for the optic tectum. Mech. Dev. 91, 43–52.
Kawakami, K., Ohto, H., Takizawa, T., Saito, T., 1996. Identification and expression of six family genes in mouse retina. FEBS Lett. 393, 259–263.
Kawakami, K., Sato, S., Ozaki, H., Ikeda, K., 2000. Six family genes—structure and function as transcription factors and their roles in development. Bioessays 22, 616–626.
Kenyon, K.L., Li, D.J., Clouser, C., Tran, S., Pignoni, F., 2005a. Fly SIX-type homeodomain proteins Sine oculis and Optix partner with different cofactors during eye development. Dev. Dyn. 234, 497–504.
Kenyon, K.L., Yang-Zhou, D., Cai, C.Q., Tran, S., Clouser, C., Decene, G., Ranade, S., Pignoni, F., 2005b. Partner specificity is essential for proper function of the SIX-type homeodomain proteins Sine oculis and Optix during fly eye development. Dev. Biol. 286, 158–168.
Khudyakov, J., Bronner-Fraser, M., 2009. Comprehensive spatiotemporal analysis of early chick neural crest network genes. Dev. Dyn. 238, 716–723.
Kiecker, C., Niehrs, C., 2001. A morphogen gradient of Wnt/{beta}-catenin signalling regulates anteroposterior neural patterning in Xenopus. Development 128, 4189–4201.
Kim, C.H., Oda, T., Itoh, M., Jiang, D., Artinger, K.B., Chandrasekharappa, S.C., Driever, W., Chitnis, A.B., 2000. Repressor activity of Headless/Tcf3 is essential for vertebrate head formation. Nature 407, 913–916.
Knight, R.D., Nair, S., Nelson, S.S., Afshar, A., Javidan, Y., Geisler, R., Rauch, G.J., Schilling, T.F., 2003. Lockjaw encodes a zebrafish tfap2a required for early neural crest development. Development 130, 5755–5768.
Kobayashi, D., Kobayashi, M., Matsumoto, K., Ogura, T., Nakafuku, M., Shimamura, K., 2002. Early subdivisions in the neural plate define distinct competence for inductive signals. Development 129, 83–93.
Kobayashi, M., Nishikawa, K., Suzuki, T., Yamamoto, M., 2001. The homeobox protein Six3 interacts with the Groucho corepressor and acts as a transcriptional repressor in eye and forebrain formation. Dev. Biol. 232, 315–326.
Kobayashi, M., Osanai, H., Kawakami, K., Yamamoto, M., 2000. Expression of three zebrafish Six4 genes in the cranial sensory placodes and the developing somites. Mech. Dev. 98, 151–155.
Kondoh, H., Uchikawa, M., Yoda, H., Takeda, H., Furutani-Seiki, M., Karlstrom, R.O., 2000. Zebrafish mutations in Gli-mediated hedgehog signaling lead to lens transdifferentiation from the adenohypophysis anlage. Mech. Dev. 96, 165–174.
Konishi, Y., Ikeda, K., Iwakura, Y., Kawakami, K., 2006. Six1 and Six4 promote survival of sensory neurons during early trigeminal gangliogenesis. Brain Res. 1116, 93–102.
Köster, R.W., Kuhnlein, R.P., Wittbrodt, J., 2000. Ectopic Sox3 activity elicits sensory placode formation. Mech. Dev. 95, 175–187.
Kozlowski, D.J., Murakami, T., Ho, R.K., Weinberg, E.S., 1997. Regional cell movement and tissue patterning in the zebrafish embryo revealed by fate mapping with caged fluorescein. Biochem. Cell Biol. 75, 551–562.
Kozlowski, D.J., Whitfield, T.T., Hukriede, N.A., Lam, W.K., Weinberg, E.S., 2005. The zebrafish dog-eared mutation disrupts eya1, a gene required for cell survival and differentiation in the inner ear and lateral line. Dev. Biol. 277, 27–41.
Kretzschmar, M., Doody, J., Massague, J., 1997. Opposing BMP and EGF signalling pathways converge on the TGF-beta family mediator Smad1. Nature 389, 618–622.
Kroll, K.L., Salic, A.N., Evans, L.M., Kirschner, M.W., 1998. Geminin, a neuralizing molecule that demarcates the future neural plate at the onset of gastrulation. Development 125, 3247–3258.
Kwon, H.J., Bhat, N., Sweet, E.M., Cornell, R.A., Riley, B.B., 2010. Identification of early requirements for preplacodal ectoderm and sensory organ development. PLoS Genet., 6.
LaBonne, C., Bronner-Fraser, M., 1998. Neural crest induction in Xenopus: evidence for a two-signal model. Development 125, 2403–2414.
Laclef, C., Hamard, G., Demignon, J., Souil, E., Houbron, C., Maire, P., 2003. Altered myogenesis in Six1-deficient mice. Development 130, 2239–2252.
Ladher, R.K., Anakwe, K.U., Gurney, A.L., Schoenwolf, G.C., Francis-West, P.H., 2000. Identification of synergistic signals initiating inner ear development. Science 290, 1965–1968.
Ladher, R.K., O'Neill, P., Begbie, J., 2010. From shared lineage to distinct functions: the development of the inner ear and epibranchial placodes. Development 137, 1777–1785.
Lassiter, R.N., Dude, C.M., Reynolds, S.B., Winters, N.I., Baker, C.V., Stark, M.R., 2007. Canonical Wnt signaling is required for ophthalmic trigeminal placode cell fate determination and maintenance. Dev. Biol. 308, 392–406.
Leger, S., Brand, M., 2002. Fgf8 and Fgf3 are required for zebrafish ear placode induction, maintenance and inner ear patterning. Mech. Dev. 119, 91–108.
Levine, M., Davidson, E.H., 2005. Gene regulatory networks for development. Proc. Natl. Acad. Sci. USA 102, 4936–4942.
Li, B., Kuriyama, S., Moreno, M., Mayor, R., 2009. The posteriorizing gene Gbx2 is a direct target of Wnt signalling and the earliest factor in neural crest induction. Development 136, 3267–3278.
Li, H.S., Yang, J.M., Jacobson, R.D., Pasko, D., Sundin, O., 1994. Pax-6 is first expressed in a region of ectoderm anterior to the early neural plate: implications for stepwise determination of the lens. Dev. Biol. 162, 181–194.
Li, J.Y., Joyner, A.L., 2001. Otx2 and Gbx2 are required for refinement and not induction of mid-hindbrain gene expression. Development 128, 4979–4991.
Li, W., Cornell, R.A., 2007. Redundant activities of Tfap2a and Tfap2c are required for neural crest induction and development of other non-neural ectoderm derivatives in zebrafish embryos. Dev. Biol. 304, 338–354.
Li, X., Oghi, K.A., Zhang, J., Krones, A., Bush, K.T., Glass, C.K., Nigam, S.K., Aggarwal, A.K., Maas, R., Rose, D.W., Rosenfeld, M.G., 2003. Eya protein phosphatase activity regulates Six1-Dach-Eya transcriptional effects in mammalian organogenesis. Nature 426, 247–254.
Liedke, K., 1942. Lens competence in Rana pipiens. J. Exp. Zool. 90, 331–351.
Liedke, K., 1951. Lens competence in Ambystoma punctatum. J. Exp. Zool. 117, 573–591.
Linker, C., De Almeida, I., Papanayotou, C., Stower, M., Sabado, V., Ghorani, E., Streit, A., Mayor, R., Stern, C.D., 2009. Cell communication with the neural plate is required for induction of neural markers by BMP inhibition: evidence for homeogenetic induction and implications for Xenopus animal cap and chick explant assays. Dev. Biol. 327, 478–486.
Litsiou, A., Hanson, S., Streit, A., 2005. A balance of FGF, Wnt and BMP signalling positions the future placode territory in the head. Development 132, 4051–4062.
Liu, D., Chu, H., Maves, L., Yan, Y.L., Morcos, P.A., Postlethwait, J.H., Westerfield, M., 2003. Fgf3 and Fgf8 dependent and independent transcription factors are required for otic placode specification. Development 130, 2213–2224.
Liu, W., Lagutin, O.V., Mende, M., Streit, A., Oliver, G., 2006. Six3 activation of Pax6 expression is essential for mammalian lens induction and specification. Embo J. 25, 5383–5395.
Longabaugh, W.J., Davidson, E.H., Bolouri, H., 2005. Computational representation of developmental genetic regulatory networks. Dev. Biol. 283, 1–16.
Longabaugh, W.J., Davidson, E.H., Bolouri, H., 2009. Visualization, documentation, analysis, and communication of large-scale gene regulatory networks. Biochim. Biophys. Acta 1789, 363–374.
Lunn, J.S., Fishwick, K.J., Halley, P.A., Storey, K.G., 2007. A spatial and temporal map of FGF/Erk1/2 activity and response repertoires in the early chick embryo. Dev. Biol. 302, 536–552.
Luo, T., Matsuo-Takasaki, M., Lim, J.H., Sargent, T.D., 2001a. Differential regulation of Dlx gene expression by a BMP morphogenetic gradient. Int. J. Dev. Biol. 45, 681–684.
Luo, T., Matsuo-Takasaki, M., Sargent, T.D., 2001b. Distinct roles for Distal-less genes Dlx3 and Dlx5 in regulating ectodermal development in Xenopus. Mol. Reprod. Dev. 60, 331–337.
Mackereth, M.D., Kwak, S.J., Fritz, A., Riley, B.B., 2005. Zebrafish pax8 is required for otic placode induction and plays a redundant role with Pax2 genes in the maintenance of the otic placode. Development 132, 371–382.
Maeda, R., Kobayashi, A., Sekine, R., Lin, J.J., Kung, H., Maeno, M., 1997. Xmsx-1 modifies mesodermal tissue pattern along dorsoventral axis in Xenopus laevis embryo. Development 124, 2553–2560.
Mardon, G., Solomon, N.M., Rubin, G.M., 1994. dachshund encodes a nuclear protein required for normal eye and leg development in Drosophila. Development 120, 3473–3486.
Maroon, H., Walshe, J., Mahmood, R., Kiefer, P., Dickson, C., Mason, I., 2002. Fgf3 and Fgf8 are required together for formation of the otic placode and vesicle. Development 129, 2099–2108.
Martin, K., Groves, A.K., 2006. Competence of cranial ectoderm to respond to Fgf signaling suggests a two-step model of otic placode induction. Development 133, 877–887.
Massague, J., 1998. TGF-beta signal transduction. Annu. Rev. Biochem. 67, 753–791.
Matsuo-Takasaki, M., Matsumura, M., Sasai, Y., 2005. An essential role of Xenopus Foxi1a for ventral specification of the cephalic ectoderm during gastrulation. Development 132, 3885–3894.

UNCORRECTED PROOF

Please cite this article as: Grocott, T., et al., The peripheral sensory nervous system in the vertebrate head: A gene regulatory perspective. Dev. Biol. (2012), http://dx.doi.org/10.1016/j.ydbio.2012.06.028

Mayor, R., Guerrero, N., Martinez, C., 1997. Role of FGF and noggin in neural crest induction. Dev. Biol. 189, 1–12.
McCabe, K.L., Bronner-Fraser, M., 2008. Essential role for PDGF signaling in ophthalmic trigeminal placode induction. Development 135, 1863–1874.
McCabe, K.L., Bronner-Fraser, M., 2009. Molecular and tissue interactions governing induction of cranial ectodermal placodes. Dev. Biol. 332, 189–195.
McLarren, K.W., Litsiou, A., Streit, A., 2003. DLX5 positions the neural crest and preplacode region at the border of the neural plate. Dev. Biol. 259, 34–47.
Merzdorf, C.S., 2007. Emerging roles for zic genes in early development. Dev. Dyn. 236, 922–940.
Millet, S., Campbell, K., Epstein, D.J., Losos, K., Harris, E., Joyner, A.L., 1999. A role for Gbx2 in repression of Otx2 and positioning the mid/hindbrain organizer. Nature 401, 161–164.
Mishima, N., Tomarev, S., 1998. Chicken Eyes absent 2 gene: isolation and expression pattern during development. Int. J. Dev. Biol. 42, 1109–1115.
Mizuseki, K., Kishi, M., Matsui, M., Nakanishi, S., Sasai, Y., 1998. Xenopus Zic-related-1 and Sox-2, two factors induced by chordin, have distinct activities in the initiation of neural induction. Development 125, 579–587.
Monsoro-Burq, A.H., Fletcher, R.B., Harland, R.M., 2003. Neural crest induction by paraxial mesoderm in Xenopus embryos requires FGF signals. Development 130, 3111–3124.
Monsoro-Burq, A.H., Wang, E., Harland, R., 2005. Msx1 and Pax3 cooperate to mediate FGF8 and WNT signals during Xenopus neural crest induction. Dev. Cell 8, 167–178.
Moury, J.D., Jacobson, A.G., 1989. Neural fold formation at newly created boundaries between neural plate and epidermis in the axolotl. Dev. Biol. 133, 44–57.
Muta, M., Kamachi, Y., Yoshimoto, A., Higashi, Y., Kondoh, H., 2002. Distinct roles of SOX2, Pax6 and Maf transcription factors in the regulation of lens-specific delta1-crystallin enhancer. Genes Cells 7, 791–805.
Nakata, K., Nagai, T., Aruga, J., Mikoshiba, K., 1997. Xenopus Zic3, a primary regulator both in neural and neural crest development. Proc. Natl. Acad. Sci. USA 94, 11980–11985.
Nakata, K., Nagai, T., Aruga, J., Mikoshiba, K., 1998. Xenopus Zic family and its role in neural and neural crest development. Mech. Dev. 75, 43–51.
Nechiporuk, A., Linbo, T., Poss, K.D., Raible, D.W., 2007. Specification of epibranchial placodes in zebrafish. Development 134, 611–623.
Nechiporuk, A., Linbo, T., Raible, D.W., 2005. Endoderm-derived Fgf3 is necessary and sufficient for inducing neurogenesis in the epibranchial placodes in zebrafish. Development 132, 3717–3730.
Neilson, K.M., Pignoni, F., Yan, B., Moody, S.A., 2010. Developmental expression patterns of candidate cofactors for vertebrate six family transcription factors. Dev. Dyn. 239, 3446–3466.
Nieuwkoop, P.D., 1958. Neural competence of the gastrula ectoderm in *Ambystoma mexicanum*. An attempt at quantative analysis of morphogenesis. Acta Embryol. Morphol. 2, 13–53.
Nikaido, M., Doi, K., Shimizu, T., Hibi, M., Kikuchi, Y., Yamasu, K., 2007. Initial specification of the epibranchial placode in zebrafish embryos depends on the fibroblast growth factor signal. Dev. Dyn. 236, 564–571.
Nissen, R.M., Yan, J., Amsterdam, A., Hopkins, N., Burgess, S.M., 2003. Zebrafish foxi one modulates cellular responses to Fgf signaling required for the integrity of ear and jaw patterning. Development 130, 2543–2554.
Ogita, J., Isogai, E., Sudo, H., Sakiyama, S., Nakagawara, A., Koseki, H., 2001. Expression of the Dan gene during chicken embryonic development. Mech. Dev. 109, 363–365.
Ohto, H., Kamada, S., Tago, K., Tominaga, S.I., Ozaki, H., Sato, S., Kawakami, K., 1999. Cooperation of six and eya in activation of their target genes through nuclear translocation of Eya. Mol. Cell Biol. 19, 6815–6824.
Ohuchi, H., Kimura, S., Watamoto, M., Itoh, N., 2000. Involvement of fibroblast growth factor (FGF)18-FGF8 signaling in specification of left–right asymmetry and brain and limb development of the chick embryo. Mech. Dev. 95, 55–66.
Ohyama, T., Groves, A.K., 2004. Expression of mouse Foxi class genes in early craniofacial development. Dev. Dyn. 231, 640–646.
Ohyama, T., Groves, A.K., Martin, K., 2007. The first steps towards hearing: mechanisms of otic placode induction. Int. J. Dev. Biol. 51, 463–472.
Ohyama, T., Mohamed, O.A., Taketo, M.M., Dufort, D., Groves, A.K., 2006. Wnt signals mediate a fate decision between otic placode and epidermis. Development 133, 865–875.
Ozaki, H., Nakamura, K., Funahashi, J., Ikeda, K., Yamada, G., Tokano, H., Okamura, H.O., Kitamura, K., Muto, S., Kotaki, H., Sudo, K., Horai, R., Iwakura, Y., Kawakami, K., 2004. Six1 controls patterning of the mouse otic vesicle. Development 131, 551–562.
Padanad, M.S., Riley, B.B., 2011. Pax2/8 proteins coordinate sequential induction of otic and epibranchial placodes through differential regulation of foxi1, sox3 and fgf24. Dev. Biol. 351, 90–98.
Pandur, P.D., Moody, S.A., 2000. Xenopus Six1 gene is expressed in neurogenic cranial placodes and maintained in the differentiating lateral lines. Mech. Dev. 96, 253–257.
Papalopulu, N., Kintner, C., 1993. Xenopus distal-less related homeobox genes are expressed in the developing forebrain and are induced by planar signals. Development 117, 961–975.
Papanayotou, C., Mey, A., Birot, A.M., Saka, Y., Boast, S., Smith, J.C., Samarut, J., Stern, C.D., 2008. A mechanism regulating the onset of Sox2 expression in the embryonic neural plate. PLoS Biol. 6, e2.
Park, B.Y., Saint-Jeannet, J.P., 2008. Hindbrain-derived Wnt and Fgf signals cooperate to specify the otic placode in Xenopus. Dev. Biol. 324, 108–121.
Patthey, C., Gunhaga, L., Edlund, T., 2008. Early development of the central and peripheral nervous systems is coordinated by Wnt and BMP signals. PLoS ONE 3, e1625.
Pera, E., Kessel, M., 1999. Expression of DLX3 in chick embryos. Mech. Dev. 89, 189–193.
Pera, E., Stein, S., Kessel, M., 1999. Ectodermal patterning in the avian embryo: epidermis versus neural plate. Development 126, 63–73.
Peter, Isabelle S., Davidson, Eric H, 2011. Evolution of gene regulatory networks controlling body plan development. Cell 144, 970–985.
Phillips, B.T., Bolding, K., Riley, B.B., 2001. Zebrafish fgf3 and fgf8 encode redundant functions required for otic placode induction. Dev. Biol. 235, 351–365.
Phillips, B.T., Kwon, H.J., Melton, C., Houghtaling, P., Fritz, A., Riley, B.B., 2006. Zebrafish msxB, msxC and msxE function together to refine the neural-nonneural border and regulate cranial placodes and neural crest development. Dev. Biol. 294, 376–390.
Phillips, B.T., Storch, E.M., Lekven, A.C., Riley, B.B., 2004. A direct role for Fgf but not Wnt in otic placode induction. Development 131, 923–931.
Pieper, M., Ahrens, K., Rink, E., Peter, A., Schlosser, G., 2012. Differential distribution of competence for panplacodal and neural crest induction to non-neural and neural ectoderm. Development 139, 1175–1187.
Pieper, M., Eagleson, G.W., Wosniok, W., Schlosser, G., 2011. Origin and segregation of cranial placodes in *Xenopus laevis*. Dev. Biol. 360, 257–275.
Pignoni, F., Hu, B., Zavitz, K.H., Xiao, J., Garrity, P.A., Zipursky, S.L., 1997a. The eye-specification proteins So and Eya form a complex and regulate multiple steps in Drosophila eye development. Cell 91, 881–891.
Pignoni, F., Hu, B., Zipursky, S.L., 1997b. Identification of genes required for Drosophila eye development using a phenotypic enhancer-trap. Proc. Natl. Acad. Sci. USA 94, 9220–9225.
Quinn, J., West, J., Hill, R., 1996. Multiple functions for Pax6 in mouse eye and nasal development. Genes Dev. 10, 435–446.
Rayapureddi, J.P., Kattamuri, C., Steinmetz, B.D., Frankfort, B.J., Ostrin, E.J., Mardon, G., Hegde, R.S., 2003. Eyes absent represents a class of protein tyrosine phosphatases. Nature 426, 295–298.
Rex, M., Orme, A., Uwanogho, D., Tointon, K., Wigmore, P.M., Sharpe, P.T., Scotting, P.J., 1997. Dynamic expression of chicken Sox2 and Sox3 genes in ectoderm induced to form neural tissue. Dev. Dyn. 209, 323–332.
Rhinn, M., Lun, K., Ahrendt, R., Geffarth, M., Brand, M., 2009. Zebrafish gbx1 refines the midbrain-hindbrain boundary border and mediates the Wnt8 posteriorization signal. Neural Dev. 4, 12.
Riley, B.B., Phillips, B.T., 2003. Ringing in the new ear: resolution of cell interactions in otic development. Dev. Biol. 261, 289–312.
Rodriguez Esteban, C., Capdevila, J., Economides, A.N., Pascual, J., Ortiz, A., Izpisua Belmonte, J.C., 1999. The novel Cer-like protein Caronte mediates the establishment of embryonic left–right asymmetry. Nature 401, 243–251.
Rogers, C.D., Harafuji, N., Archer, T., Cunningham, D.D., Casey, E.S., 2009. Xenopus Sox3 activates sox2 and geminin and indirectly represses Xvent2 expression to induce neural progenitor formation at the expense of non-neural ectodermal derivatives. Mech. Dev. 126, 42–55.
Ruf, R.G., Xu, P.X., Silvius, D., Otto, E.A., Beekmann, F., Muerb, U.T., Kumar, S., Neuhaus, T.J., Kemper, M.J., Raymond Jr., R.M., Brophy, P.D., Berkman, J., Gattas, M., Hyland, V., Ruf, E.M., Schwartz, C., Chang, E.H., Smith, R.J., Stratakis, C.A., Weil, D., Petit, C., Hildebrandt, F., 2004. SIX1 mutations cause branchio-oto-renal syndrome by disruption of EYA1-SIX1-DNA complexes. Proc. Natl. Acad. Sci. USA 101, 8090–8095.
Saigou, Y., Kamimura, Y., Inoue, M., Kondoh, H., Uchikawa, M., 2010. Regulation of Sox2 in the pre-placodal cephalic ectoderm and central nervous system by enhancer N-4. Dev. Growth Differ. 52, 397–408.
Sanyanusin, P., McNoe, L.A., Sullivan, M.J., Weaver, R.G., Eccles, M.R., 1995. Mutation of PAX2 in two siblings with renal-coloboma syndrome. Hum. Mol. Genet. 4, 2183–2184.
Sato, S., Ikeda, K., Shioi, G., Nakao, K., Yajima, H., Kawakami, K., 2012. Regulation of Six1 expression by evolutionarily conserved enhancers in tetrapods. Dev. Biol...
Sato, S., Ikeda, K., Shioi, G., Ochi, H., Ogino, H., Yajima, H., Kawakami, K., 2010. Conserved expression of mouse Six1 in the pre-placodal region (PPR) and identification of an enhancer for the rostral PPR. Dev. Biol. 344, 158–171.
Sauka-Spengler, T., Bronner-Fraser, M., 2008. A gene regulatory network orchestrates neural crest formation. Nat. Rev. Mol. Cell Biol. 9, 557–568.
Sbrogna, J.L., Barresi, M.J., Karlstrom, R.O., 2003. Multiple roles for Hedgehog signaling in zebrafish pituitary development. Dev. Biol. 254, 19–35.
Schimmang, T., 2007. Expression and functions of FGF ligands during early otic development. Int. J. Dev. Biol. 51, 473–481.
Schimmenti, L.A., Cunliffe, H.E., McNoe, L.A., Ward, T.A., French, M.C., Shim, H.H., Zhang, Y.H., Proesmans, W., Leys, A., Byerly, K.A., Braddock, S.R., Masuno, M., Imaizumi, K., Devriendt, K., Eccles, M.R., 1997. Further delineation of renal-coloboma syndrome in patients with extreme variability of phenotype and identical PAX2 mutations. Am. J. Hum. Genet. 60, 869–878.
Schlosser, G., 2006. Induction and specification of cranial placodes. Dev. Biol. 294, 303–351.
Schlosser, G., 2010. Making senses development of vertebrate cranial placodes. Int. Rev. Cell Mol. Biol. 283, 129–234.
Schlosser, G., Ahrens, K., 2004. Molecular anatomy of placode development in Xenopus laevis. Dev. Biol. 271, 439–466.
Schonberger, J., Wang, L., Shin, J.T., Kim, S.D., Depreux, F.F., Zhu, H., Zon, L., Pizard, A., Kim, J.B., Macrae, C.A., Mungall, A.J., Seidman, J.G., Seidman, C.E., 2005. Mutation in the transcriptional coactivator EYA4 causes dilated cardiomyopathy and sensorineural hearing loss. Nat. Genet. 37, 418–422.

UNCORRECTED PROOF

Please cite this article as: Grocott, T., et al., The peripheral sensory nervous system in the vertebrate head: A gene regulatory perspective. Dev. Biol. (2012), http://dx.doi.org/10.1016/j.ydbio.2012.06.028

Schubert, F.R., Mootoosamy, R.C., Walters, E.H., Graham, A., Tumiotto, L., Munsterberg, A.E., Lumsden, A., Dietrich, S., 2002. Wnt6 marks sites of epithelial transformations in the chick embryo. Mech. Dev. 114, 143–148.
Schwarz, M., Alvarez-Bolado, G., Dressler, G., Urbanek, P., Busslinger, M., Gruss, P., 1999. Pax2/5 and Pax6 subdivide the early neural tube into three domains. Mech. Dev. 82, 29–39.
Selleck, M.A., Bronner-Fraser, M., 1995. Origins of the avian neural crest: the role of neural plate–epidermal interactions. Development 121, 525–538.
Serikaku, M.A., O'Tousa, J.E., 1994. sine oculis is a homeobox gene required for Drosophila visual system development. Genetics 138, 1137–1150.
Servetnick, M., Grainger, R.M., 1991. Changes in neural and lens competence in Xenopus ectoderm: evidence for an autonomous developmental timer. Development 112, 177–188.
Shamim, H., Mason, I., 1999. Expression of Fgf4 during early development of the chick embryo. Mech. Dev. 85, 189–192.
Shen, W., Mardon, G., 1997. Ectopic eye development in Drosophila induced by directed dachshund expression. Development 124, 45–52.
Sheng, G., Stern, C.D., 1999. Gata2 and Gata3: novel markers for early embryonic polarity and for non-neural ectoderm in the chick embryo. Mech. Dev. 87, 213–216.
Shigetani, Y., Howard, S., Guidato, S., Furushima, K., Abe, T., Itasaki, N., 2008. Wise promotes coalescence of cells of neural crest and placode origins in the trigeminal region during head development. Dev. Biol. 319, 346–358.
Simeone, A., Acampora, D., Gulisano, M., Stornaiuolo, A., Boncinelli, E., 1992. Nested expression domains of four homeobox genes in developing rostral brain. Nature 358, 687–690.
Simeone, A., Acampora, D., Mallamaci, A., Stornaiuolo, A., D'Apice, M.R., Nigro, V., Boncinelli, E., 1993. A vertebrate gene related to orthodenticle contains a homeodomain of the bicoid class and demarcates anterior neuroectoderm in the gastrulating mouse embryo. Embo J. 12, 2735–2747.
Sjodal, M., Edlund, T., Gunhaga, L., 2007. Time of exposure to BMP signals plays a key role in the specification of the olfactory and lens placodes ex vivo. Dev. Cell 13, 141–149.
Skromne, I., Stern, C.D., 2001. Interactions between Wnt and Vg1 signalling pathways initiate primitive streak formation in the chick embryo. Development 128, 2915–2927.
Smith, A.N., Miller, L.A., Song, N., Taketo, M.M., Lang, R.A., 2005. The duality of beta-catenin function: a requirement in lens morphogenesis and signaling suppression of lens fate in periocular ectoderm. Dev. Biol. 285, 477–489.
Solomon, K.S., Fritz, A., 2002. Concerted action of two dlx paralogs in sensory placode formation. Development 129, 3127–3136.
Solomon, K.S., Kudoh, T., Dawid, I.B., Fritz, A., 2003a. Zebrafish foxi1 mediates otic placode formation and jaw development. Development 130, 929–940.
Solomon, K.S., Kwak, S.J., Fritz, A., 2004. Genetic interactions underlying otic placode induction and formation. Dev. Dyn. 230, 419–433.
Solomon, K.S., Logsdon Jr., J.M., Fritz, A., 2003b. Expression and phylogenetic analyses of three zebrafish FoxI class genes. Dev. Dyn. 228, 301–307.
Stark, M.R., Sechrist, J., Bronner-Fraser, M., Marcelle, C., 1997. Neural tube-ectoderm interactions are required for trigeminal placode formation. Development 124, 4287–4295.
Stern, C.D., Downs, K.M., 2012. The hypoblast (visceral endoderm): an evo-devo perspective. Development 139, 1059–1069.
Steventon, B., Araya, C., Linker, C., Kuriyama, S., Mayor, R., 2009. Differential requirements of BMP and Wnt signalling during gastrulation and neurulation define two steps in neural crest induction. Development 136, 771–779.
Steventon, B., Mayor, R., 2012. Early neural crest induction requires an initial inhibition of Wnt signals. Dev. Biol..
Steventon, B., Mayor, R., Streit, A., 2012. Mutual repression between Gbx2 and Otx2 in sensory placodes reveals a general mechanism for ectodermal patterning. Dev. Biol..
Storey, K.G., Crossley, J.M., De Robertis, E.M., Norris, W.E., Stern, C.D., 1992. Neural induction and regionalisation in the chick embryo. Development 114, 729–741.
Streit, A., 2002. Extensive cell movements accompany formation of the otic placode. Dev. Biol. 249, 237–254.
Streit, A., 2007. The preplacodal region: an ectodermal domain with multipotential progenitors that contribute to sense organs and cranial sensory ganglia. Int. J. Dev. Biol. 51, 447–461.
Streit, A., 2008. The cranial sensory nervous system: specification of sensory progenitors and placodes.
Q6
Streit, A., Berliner, A.J., Papanayotou, C., Sirulnik, A., Stern, C.D., 2000. Initiation of neural induction by FGF signalling before gastrulation. Nature 406, 74–78.
Streit, A., Lee, K.J., Woo, I., Roberts, C., Jessell, T.M., Stern, C.D., 1998. Chordin regulates primitive streak development and the stability of induced neural cells, but is not sufficient for neural induction in the chick embryo. Development 125, 507–519.
Streit, A., Sockanathan, S., Perez, L., Rex, M., Scotting, P.J., Sharpe, P.T., Lovell-Badge, R., Stern, C.D., 1997. Preventing the loss of competence for neural induction: HGF/SF, L5 and Sox-2. Development 124, 1191–1202.
Streit, A., Stern, C.D., 1999. Establishment and maintenance of the border of the neural plate in the chick: involvement of FGF and BMP activity. Mech. Dev. 82, 51–66.
Stuhlmiller, T.J., García-Castro, M.I., 2012. FGF/MAPK signaling is required in the gastrula epiblast for avian neural crest induction. Development 139, 289–300.
Sun, S.K., Dee, C.T., Tripathi, V.B., Rengifo, A., Hirst, C.S., Scotting, P.J., 2007. Epibranchial and otic placodes are induced by a common Fgf signal, but their subsequent development is independent. Dev. Biol. 303, 675–686.
Suzuki, A., Ueno, N., Hemmati-Brivanlou, A., 1997. Xenopus msx1 mediates epidermal induction and neural inhibition by BMP4. Development 124, 3037–3044.
Sweetman, D., Smith, T.G., Farrell, E.R., Munsterberg, A., 2005. Expression of csal1 in pre limb-bud chick embryos. Int. J. Dev. Biol. 49, 427–430.
Tessmar, K., Loosli, F., Wittbrodt, J., 2002. A screen for co-factors of Six3. Mech. Dev. 117, 103–113.
Tootle, T.L., Silver, S.J., Davies, E.L., Newman, V., Latek, R.R., Mills, I.A., Selengut, J.D., Parlikar, B.E., Rebay, I., 2003. The transcription factor Eyes absent is a protein tyrosine phosphatase. Nature 426, 299–302.
Torres, M., Giraldez, F., 1998. The development of the vertebrate inner ear. Mech. Dev. 71, 5–21.
Torres, M., Gomez-Pardo, E., Gruss, P., 1996. Pax2 contributes to inner ear patterning and optic nerve trajectory. Development 122, 3381–3391.
Tour, E., Pillemer, G., Gruenbaum, Y., Fainsod, A., 2001. The two Xenopus Gbx2 genes exhibit similar, but not identical expression patterns and can affect head formation. FEBS Lett. 507, 205–209.
Tribulo, C., Aybar, M.J., Nguyen, V.H., Mullins, M.C., Mayor, R., 2003. Regulation of Msx genes by a Bmp gradient is essential for neural crest specification. Development 130, 6441–6452.
Uchikawa, M., Ishida, Y., Takemoto, T., Kamachi, Y., Kondoh, H., 2003. Functional analysis of chicken Sox2 enhancers highlights an array of diverse regulatory elements that are conserved in mammals. Dev. Cell 4, 509–519.
van de Water, S., van de Wetering, M., Joore, J., Esseling, J., Bink, R., Clevers, H., Zivkovic, D., 2001. Ectopic Wnt signal determines the eyeless phenotype of zebrafish masterblind mutant. Development 128, 3877–3888.
Varga, Z.M., Amores, A., Lewis, K.E., Yan, Y.L., Postlethwait, J.H., Eisen, J.S., Westerfield, M., 2001. Zebrafish smoothened functions in ventral neural tube specification and axon tract formation. Development 128, 3497–3509.
Villanueva, S., Glavic, A., Ruiz, P., Mayor, R., 2002. Posteriorization by FGF, Wnt, and retinoic acid is required for neural crest induction. Dev. Biol. 241, 289–301.
Vogel-Hopker, A., Momose, T., Rohrer, H., Yasuda, K., Ishihara, L., Rapaport, D.H., 2000. Multiple functions of fibroblast growth factor-8 (FGF-8) in chick eye development. Mech. Dev. 94, 25–36.
von Bubnoff, A., Schmidt, J.E., Kimelman, D., 1996. The Xenopus laevis homeobox gene Xgbx-2 is an early marker of anteroposterior patterning in the ectoderm. Mech. Dev. 54, 149–160.
Waddington, C.H., 1934. Experiments on embryonic induction. Part I: The competence of the extra-embryonic ectoderm. Part II: Experiments on coagulated organisers in the chick. Part III: A note on inductions by chick primitive streak transplanted to the rabbit embryo. J. Exp. Biol. 11, 211–227.
Waddington, C.H., 1935. The origin of competence for lens formation in the amphibia. J. Exp. Biol. 8, 86–91.
Waddington, C.H., 1937. The determination of the auditory placode in the chick. J. Exp. Biol. 14, 232–239.
Waddington, C.H., Needham, J., 1936. Evocation, individuation, and competence in amphibian organizer action. Proc Kon Akad Wetensch Amsterdam 39, 887–891.
Wakamatsu, Y., 2011. Mutual repression between Pax3 and Pax6 is involved in the positioning of ophthalmic trigeminal placode in avian embryo. Dev. Growth Differ. 53, 994–1003.
Wassarman, K.M., Lewandoski, M., Campbell, K., Joyner, A.L., Rubenstein, J.L., Martinez, S., Martin, G.R., 1997. Specification of the anterior hindbrain and establishment of a normal mid/hindbrain organizer is dependent on Gbx2 gene function. Development 124, 2923–2934.
Wawersik, S., Maas, R.L., 2000. Vertebrate eye development as modeled in Drosophila. Hum. Mol. Genet. 9, 917–925.
Wawersik, S., Purcell, P., Rauchman, M., Dudley, A.T., Robertson, E.J., Maas, R., 1999. BMP7 acts in murine lens placode development. Dev. Biol. 207, 176–188.
Wayne, S., Robertson, N.G., DeClau, F., Chen, N., Verhoeven, K., Prasad, S., Tranebjarg, L., Morton, C.C., Ryan, A.F., Van Camp, G., Smith, R.J., 2001. Mutations in the transcriptional activator EYA4 cause late-onset deafness at the DFNA10 locus. Hum. Mol. Genet. 10, 195–200.
Weasner, B., Salzer, C., Kumar, J.P., 2007. Sine oculis, a member of the SIX family of transcription factors, directs eye formation. Dev. Biol. 303, 756–771.
Webb, J.F., Noden, D.M., 1993. Ectodermal placodes: contributions to the development of the vertebrate head. Am. Zool. 33, 434–447.
Wilson, S.I., Edlund, T., 2001. Neural induction: toward a unifying mechanism. Nat. Neurosci. (4 Suppl.), 1161–1168.
Wilson, S.I., Rydstrom, A., Trimborn, T., Willert, K., Nusse, R., Jessell, T.M., Edlund, T., 2001. The status of Wnt signalling regulates neural and epidermal fates in the chick embryo. Nature 411, 325–330.
Winchester, C.L., Ferrier, R.K., Sermoni, A., Clark, B.J., Johnson, K.J., 1999. Characterization of the expression of DMPK and SIX5 in the human eye and implications for pathogenesis in myotonic dystrophy. Hum. Mol. Genet. 8, 481–492.
Woda, J.M., Pastagia, J., Mercola, M., Artinger, K.B., 2003. Dlx proteins position the neural plate border and determine adjacent cell fates. Development 130, 331–342.
Wright, T.J., Mansour, S.L., 2003. Fgf3 and Fgf10 are required for mouse otic placode induction. Development 130, 3379–3390.

Please cite this article as: Grocott, T., et al., The peripheral sensory nervous system in the vertebrate head: A gene regulatory perspective. Dev. Biol. (2012), http://dx.doi.org/10.1016/j.ydbio.2012.06.028

ARTICLE IN PRESS

Wu, M.Y., Hill, C.S., 2009. Tgf-beta superfamily signaling in embryonic development and homeostasis. Dev. Cell 16, 329–343.

Xu, H., 2008. Development of the Maxillomandibular Trigeminal Placode in the Chick Embryo. University of Cambridge, Cambridge.

Xu, H., Dude, C.M., Baker, C.V.H., 2008. Fine-grained fate maps for the ophthalmic and maxillomandibular trigeminal placodes in the chick embryo. Dev. Biol. 317, 174–186.

Xu, P.X., Adams, J., Peters, H., Brown, M.C., Heaney, S., Maas, R., 1999. Eya1-deficient mice lack ears and kidneys and show abnormal apoptosis of organ primordia. Nat. Genet. 23, 113–117.

Yamamoto, T.S., Takagi, C., Ueno, N., 2000. Requirement of Xmsx-1 in the BMP-triggered ventralization of Xenopus embryos. Mech. Dev. 91, 131–141.

Yang, L., Zhang, H., Hu, G., Wang, H., Abate-Shen, C., Shen, M.M., 1998. An early phase of embryonic Dlx5 expression defines the rostral boundary of the neural plate. J. Neurosci. 18, 8322–8330.

Yoshimoto, A., Saigou, Y., Higashi, Y., Kondoh, H., 2005. Regulation of ocular lens development by Smad-interacting protein 1 involving Foxe3 activation. Development 132, 4437–4448.

Zhang, H., Hu, G., Wang, H., Sciavolino, P., Iler, N., Shen, M.M., Abate-Shen, C., 1997. Heterodimerization of Msx and Dlx homeoproteins results in functional antagonism. Mol. Cell Biol. 17, 2920–2932.

Zhang, J., Jacobson, A.G., 1993. Evidence that the border of the neural plate may be positioned by the interaction between signals that induce ventral and dorsal mesoderm. Dev. Dyn. 196, 79–90.

Zhang, Y., Knosp, B.M., Maconochie, M., Friedman, R.A., Smith, R.J., 2004. A comparative study of Eya1 and Eya4 protein function and its implication in branchio-oto-renal syndrome and DFNA10. J. Assoc. Res. Otolaryngol. 5, 295–304.

Zheng, W., Huang, L., Wei, Z.B., Silvius, D., Tang, B., Xu, P.X., 2003. The role of Six1 in mammalian auditory system development. Development 130, 3989–4000.

Zhu, C.C., Dyer, M.A., Uchikawa, M., Kondoh, H., Lagutin, O.V., Oliver, G., 2002. Six3-mediated auto repression and eye development requires its interaction with members of the Groucho-related family of co-repressors. Development 129, 2835–2849.

Zilinski, C.A., Shah, R., Lane, M.E., Jamrich, M., 2005. Modulation of zebrafish pitx3 expression in the primordia of the pituitary, lens, olfactory epithelium and cranial ganglia by hedgehog and nodal signaling. Genesis 41, 33–40.

Zou, D., Silvius, D., Fritzsch, B., Xu, P.X., 2004. Eya1 and Six1 are essential for early steps of sensory neurogenesis in mammalian cranial placodes. Development 131, 5561–5572.

Zou, D., Silvius, D., Rodrigo-Blomqvist, S., Enerback, S., Xu, P.-X., 2006. Eya1 regulates the growth of otic epithelium and interacts with Pax2 during the development of all sensory areas in the inner ear. Dev. Biol. 298, 430–441.

Zygar, C.A., Cook, T.L., Grainger Jr., R.M., 1998. Gene activation during early stages of lens induction in Xenopus. Development 125, 3509–3519.

UNCORRECTED PROOF

Please cite this article as: Grocott, T., et al., The peripheral sensory nervous system in the vertebrate head: A gene regulatory perspective. Dev. Biol. (2012), http://dx.doi.org/10.1016/j.ydbio.2012.06.028